Hawaii's Artificial Reefs

Paul Murakawa
Aquatic Biologist
Division of Aquatic Resources (DAR)
Department of Land and Natural Resources
State of Hawaii

Overview of Hawaii's Artificial Reefs-Types

- Fishing Opportunities
- Tourist Attractions
- "Artificial reef" Projects

History of DAR's Artificial Reef Project

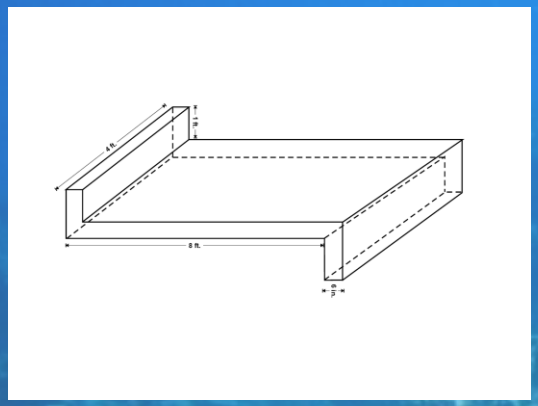

- Since 1960
- Locations
- Funding
- Materials

Positives

Enhances habitat

Removes fishing and diving pressure from natural reefs

Negatives

Fish Aggregation Area

Accidents can happen

Enhances Habitat
(Example from Maunalua Bay Artificial Reef, Oahu)

Barren limestone/sand area →

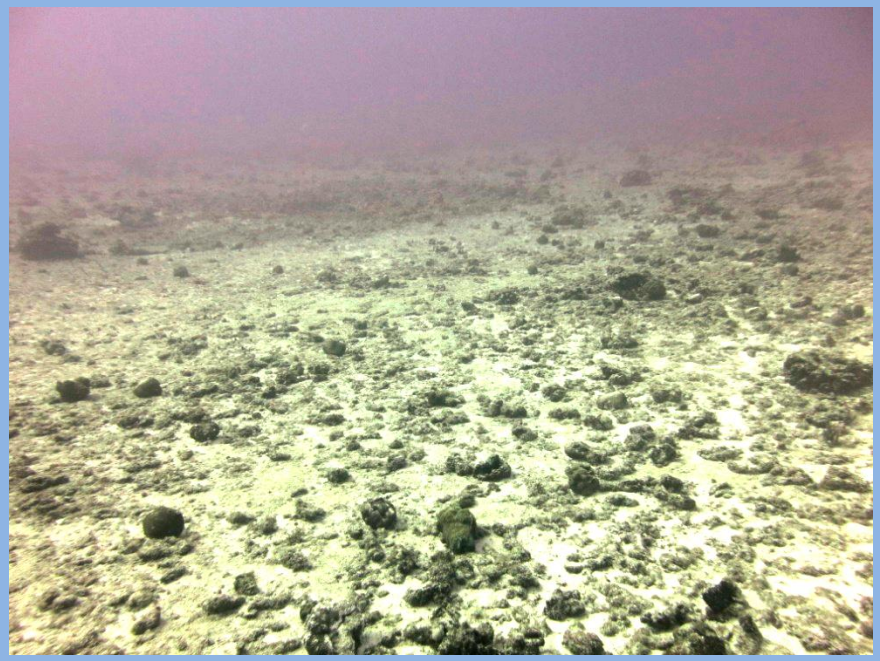

Mean fish biomass was 5.4 g/m^2

Mean number of species observed was seven

← **Post deployment (2-3 years)**

Mean biomass increased 20 fold

Mean number of species went up 5 fold

Biggest Challenges and Lessons Learned

- Permitting Process
- Type of material used
- Complete assessment

Needs Moving Forward

- Improve Permit Process (Federal and State agencies)
- Use of artificial reefs as a compensatory mitigation option

Mahalo (Thank you)

Paul Murakawa
Division of Aquatic Resources (DAR)
Paul.Y.Murakawa@hawaii.gov