Testing the Use of Electronic Monitoring to Quantify At-sea Halibut Discards in the Central Gulf of Alaska Rockfish Fishery

EFP 07-02 Final Report

Prepared by

Julie Bonney and Katy McGauley

Alaska Groundfish Data Bank

P.O. Box 788

Kodiak, AK 99615

May 2008

TABLE OF CONTENTS

INTRODUCTION **3**

EMPLOYING EM TO MONITOR HALIBUT DISCARDS IN THE RPP 4

METHODS **6**

PROJECT OVERVIEW 6
EM EQUIPMENT/OPERATIONS 7
OBSERVER SAMPLING 8
DATA ANALYSIS 9

RESULTS **10**
EXPERIMENTAL FISHING 10
EM SYSTEM PERFORMANCE 11
IMAGE DATA – ANALYSIS RATIOS 13
EM DATA 14
Length Conversion Factors 14
Image Clarity 16
Lighting Conditions 18
Between Reader Accuracy and Precision 18
Quantity of Halibut in Haul 20
PRECISION AND ACCURACY OF HALIBUT ESTIMATES 21
Observer Sampling 21
Variance of Estimates 21
Hypothesis Tests 24
Bootstrap Distribution 29
EM Method 30
Bootstrap Distribution 34
EM SIMULATIONS 36

DISCUSSION **36**

EM MONITORING OF AT-SEA DISCARDS 37
EM Performance 37
Monitoring Retention of CQ Species 38
Accuracy and Precision of Estimates 38
COST CONSIDERATIONS 39
LOOKING AT LARGER SCALE EM APPLICATIONS FOR THE RPP: PHASE II 40
WORKS CITED **44**
APPENDIX I **45**

Note: The following is, in part, a compilation of the reports prepared by Vivian Haist (Haist, 2008) and Archipelago Marine Research, Ltd (McElderry et al., 2008) for Alaska Groundfish Data Bank.

INTRODUCTION

An experimental study to investigate the use of an electronic monitoring (EM) system for estimating at-sea halibut discards was undertaken by Julie Bonney of the Alaska Groundfish Data Bank (AGDB) under NMFS exempted fishing permit (EFP) 07-02 issued in July 2007. NMFS Alaska Region, North Pacific Fisheries Observer Program/AFSC and John Gauvin of Gauvin and Associates were significant contributors to the design and implementation of the experiment, project management and data review.

In 2007, the management of the rockfish fishery in the Central Gulf of Alaska shifted from limited access to fishing cooperatives. Under the new Rockfish Pilot Program (RPP), fishing cooperatives track individual and co-op harvests of Cooperative Quota (CQ) species (Pacific Ocean perch or POP, pelagic shelf rockfish, northern rockfish, sablefish, Pacific cod, thornyhead rockfish) and NMFS oversees the management as appropriate. The cooperatives are allocated halibut prohibited species catch (PSC) to allow prosecution of the cooperative's quota. RPP regulations require 100% retention of all harvested quota species which are subsequently delivered to a shoreside processor and the delivery weights deducted from the cooperative's quota. Halibut PSC, however, must be discarded at-sea and, at this time, can only be effectively accounted against the cooperative's PSC quota if there is an observer onboard to sample the catch. Currently, NMFS uses these species composition samples to estimate each co-op's halibut PSC.

The issues for the in-shore RPP participants are: 1) the cost increase for observer coverage relative to the expected increase in revenues from the rockfish fishery, and 2) concerns over the precision of halibut bycatch amounts at the co-op level based on present North Pacific Observer Program sampling methods.

The RPP increased observer coverage from 30 percent to 100 percent. RPP observer costs relative to revenues from fishing rockfish are now approximately three-fold higher (roughly 7% of the ex-vessel value of the catch) than they were prior to the implementation of the RPP. The RPP likely offers some savings in fishing costs and/or higher fish prices to help compensate for the increase in the cost of observer coverage, but, to date, fishermen do not feel efficiency or price gains have fully covered the large increase in observer costs relative to rockfish revenues. For this reason, fishery participants are interested in exploring alternative, potentially lower-cost means of at-sea monitoring which will provide the necessary catch information.

The second issue of concern is the vessel-level accuracy of halibut discard estimates derived from existing observer sampling methods. The RPP allocates halibut PSC to individual co-ops. In practice, co-ops allocate the PSC to their member vessels. Our concern was that the small observer sampling

fractions taken with current methods may over or underestimate catch at the vessel level. While the halibut estimates derived from the observer samples may have been representative of the overall halibut catch at the co-op or fleet level, a more accurate estimate of a vessel's actual halibut catch would be preferable for individual accounting and co-op management purposes. In essence, the variance associated with observer sampling of this fleet may not be adequate for co-op level management.

For the RPP, it is conceivable that high quality management information could be obtained through EM instead of through increased observer coverage. The RPP fishing industry hopes that catch can be monitored at the shoreside plants along with the use of EM while the vessel is at sea to fully census discards of halibut and to ensure that all other catch is retained aboard the vessel. Similar programs using EM exist in the west coast shore-side whiting fishery and several west coast of Canada fisheries. Each of those existing systems is designed to meet their specific management needs. Regardless of the differences, EM has been demonstrated to work well in some fishery applications. The challenge is to see if it will work to meet the informational needs of the RPP.

EMPLOYING EM TO MONITOR HALIBUT DISCARDS IN THE RPP

Rockfish fishing for the major target species in the Central Gulf of Alaska is relatively selective in terms of the percentage of the catch that is rockfish and high retention rates relative to flatfish and other GOA target fisheries. Fisheries where most of the catch is retained are logical candidates for EM to monitor and account for at-sea discards, with dependence on the existing shoreside reporting systems for most quota tracking.

In 2005, a pilot study was conducted to evaluate the use of EM to monitor discards in the Central Gulf of Alaska rockfish fishery (McElderry et al., 2005). The study evaluated the utility of EM video data obtained from camera placements to observe fish sorting and handling across the entire trawl deck. One key conclusion of the 2005 GOA EM pilot study was that the feasibility of using EM, including the practicality of reviewing the video data, is higher where discard volumes are relatively low. Another conclusion was that if discarding is done from multiple locations on the vessel deck (e.g. port and starboard scuppers, trawl ramp, and over the gunnels) some discrepancies between observer tallies of discards and estimates from EM can be expected.

Additionally, cameras used in the 2005 pilot study to observe the entire deck area posed some problems for quantifying the species and quantities of the fish being discarded. Using wide angle lenses in the 2005 pilot, fish with similar appearance (e.g. species in the flatfish and rockfish families respectively) could only be identified to the family level rather than to specific species. Overall, however, the study concluded that EM can be very useful for accomplishing some of the monitoring duties needed for the Gulf of Alaska rockfish fishery. The report stressed that a logical way to make EM more effective would

be to restrict discard locations to one or two locations where specific camera placements could be used to improve the ability to distinguish between species being discarded.

This EFP project aimed to build upon the potential for EM described in the 2005 EM pilot by: 1) incorporating the single point of discard approach, and 2) extending the application of EM beyond general monitoring of discards to estimating actual amounts of halibut discard via EM. Estimating discards of certain allowable species is important because halibut remains a prohibited species in the RPP that fishermen are required to discard at sea. The ability of individual cooperatives to harvest their rockfish allocations may be directly affected by their ability to stay within the halibut bycatch limitations allocated to their cooperative. Thus, accurate monitoring of halibut discards at sea is a key issue for the Rockfish Pilot Program and hence a major area of focus for this EFP.

The specific goals of the EFP project were:

- Assess the feasibility of a fishing protocol where halibut is the only allowable discard species and sorting and discarding of halibut occur at a single location on the EFP vessel.

- Assess the haul and trip level accuracy and precision of estimates of the **number** and **weight** of halibut discarded (using published tables of length/weight regression) based on data from EM and standard observer sampling using a complete census of halibut in each haul as a known standard reference. This assessment includes statistical tests of whether there are significant differences between the estimates and the known haul amounts.

- Assess the extent to which error in the EM estimates of number and length of halibut is a function of:

    1. The equipment and its placement;
    2. Number of halibut in the haul and pace at which fish are moved through the discard chute;
    3. Degree to which the fish are moving (liveliness) when they pass through the discard chute;
    4. Orientation of the halibut relative to the length grid (for length estimations);
    5. Number of halibut moving through the discard chute simultaneously;
    6. Technique used for reviewing EM data (including individual reviewer bias);
    7. Ambient (light and sea) conditions affecting the ability of the cameras and/or the video reviewers to obtain length estimates of the discarded halibut;

- Assess the ability and effectiveness of EM to monitor and detect discard events of CQ species subject to the 100% retention regulation.

- Assess the costs associated with collecting and reviewing EM data and compare to those sustained by the 100% observer requirement.

While not an explicit objective of this EFP, this research in combination with the 2005 EM pilot (McElderry et al., 2005) and the upcoming Phase II of this EM project will help inform the future consideration of the practicality and accuracy tradeoffs in the context of the expected costs and the feasibility to using EM across all boats in a co-op. For example, the portion of the video review in the EFP that looks at the accuracy tradeoffs of reviewing EM data with more than one reviewer as well as sub-sampling of video data is expected to be especially germane to the cost and practicality assessment of EM video review for the monitoring objectives of the RPP.

METHODS

PROJECT OVERVIEW

The field work for the EFP occurred from September 15 to October 14, 2007 on board the 90 foot catcher vessel, F/V *Sea Mac.* The F/V *Sea Mac* was selected through a Request for Proposals (RFP) process conducted by AGDB in consultation with the Alaska Fisheries Science Center. A primary consideration in the selection of the Sea Mac was its sizeable beam (33'), which was necessary to provide sufficient space for the sampling layout (explained below). The vessel was also ideal for the EFP because it is equipped with three separate refrigerated sea water tanks to stow the catch. Most vessels in this size category have only two; having three provided an advantage for the statistical analyses because it would enable haul-by-haul tracking of halibut landed at the plant. In addition, the *Sea Mac* had adequate bunk space for the three to four project personnel and three crew members on board the vessel.

All fish caught during the EFP were retained under the experimental protocol with the exception of halibut which were sorted and discarded at sea as conditions allowed. All halibut discarded at sea were to be confined to a single discard location during fishing and stowing activities. The crew members were instructed to sort out all halibut and discard each, one at a time, through the "pre-discard" chute leading from the trawl alley wall to a secured holding tote (Fig. 1) This pre-discard chute was installed on the vessel prior to the first trip and consisted of a lipped aluminum chute approximately 18" wide and six feet in length (Fig 1).

On an average-sized RPP vessel, this chute would normally discharge fish overboard or into a scupper area. The extra beam and deck space on the *Sea Mac* allowed for placement of a holding area (secured tote) where halibut could be retained prior to discard. Project personnel then counted and measured each halibut as it landed in the tote, noting the lengths in sequential order to allow for comparisons of individual length estimates generated by the EM reviewers. The pre-discard chute was marked with grid lines (5 cm wide bars spaced 5 cm apart) to assist the EM data reviewer in estimating the length of each halibut (Fig. 1).

Figure 1. **"Pre-discard" chute and halibut holding tote on board the F/V *Sea Mac*.**

EM EQUIPMENT/OPERATIONS

A marine research company with experience in electronic monitoring applications in fisheries, Archipelago Marine Research, Ltd. of Victoria, B.C., was contracted for the EM operations. The company has extensive expertise in areas outside of federally managed fisheries in the United States as well as some experience with video monitoring from its participation in the 2005 Rockfish Pilot Program study (McElderry et al, 2005), the Pacific whiting and other Bering Sea and west coast fisheries. For this project, Archipelago provided and installed the complete EM system which consisted of four closed circuit television cameras, a GPS receiver, a hydraulic pressure sensor, a winch sensor, a system control box, 5 hard drives and a laptop computer or user interface (Appendix I, *EM System Description*). An EM technician was on-site in Kodiak for about 10 days and was on board the vessel during the first fishing trip to monitor and maintain the equipment, verify equipment performance, oversee catch handling operations in relation to EM operation and to provide training to project staff for monitoring EM system performance.

Two EM system data recording configurations were used. The first recorded imagery 100% of the time, once the vessel left port, and the second recorded imagery only during fishing events, as triggered by hydraulic or winch sensors. Image recording rates were set to six frames per second (fps) for the close-up of the pre-discard chute (camera 1), four fps for the overview of halibut discard chute area (camera 2), and two fps each for the deck and stern view cameras (cameras 3 and 4, respectively). Sensor data was recorded 100% of the time while the EM system was powered.

Archipelago's staff in Victoria, B.C. analyzed the video and sensor data after the EFP was completed (McElderry et al, 2008). Sensor data (GPS, hydraulic and winch rotation) were analyzed to interpret the geographic position of fishing operations and to distinguish key vessel activities including transit, gear setting, and gear retrieval.

Figure 2. **Views of camera 1 (left) and camera 3 (right) on the EFP catcher vessel, *Sea Mac***

Photo courtesy of Archipelago Marine Research, Ltd

The objectives of image interpretation were to first assess whether all the intended imagery was recorded properly, then to analyze imagery for specific events of interest.

The fishery monitoring objectives of the project required the following of the image analysis:

- Measurement of lengths of halibut on pre-discard chute: EM viewers reviewed imagery from catch stowage operations of all fishing events to enumerate and measure halibut passing across the pre-discard chute (Figure 2). Fish lengths were determined by measuring the fish in millimeters and scaling this measurement to the reference provided by the 5 cm graduation marks on the pre-discard chute. All halibut were measured by fork length. Two independent viewers examined all fishing events.

- Assessment of discard events – Imagery of the whole fishing deck was examined from a sample of fishing events to verify that all catch was being stowed and that no discarding other than halibut was occurring. For this analysis ten sets were randomly selected from the first five trips and all fishing events from the last trip were selected.

Image analysis times were recorded for all aspects of EM data analysis in order to measure the amount of time required to analyze imagery in relation to the real time of the fishing event.

OBSERVER SAMPLING

In addition to the electronic monitoring video records of halibut (EM), and a census of the at-sea halibut discards (C), halibut samples (counts and weights) were taken using standard observer sampling (OS)

methods. This aspect of the project was done with significant technical and field management assistance from the NMFS Observer Program (AFSC) and NMFS Alaska Regional Office. The overall objective was to provide data for a technical examination of some of the accuracy/precision tradeoffs between observer sampling and EM for estimating halibut catch in the RPP. Collection of these data required that observer samples be taken from unsorted catches. The field study design therefore had to accommodate for the two catch accounting objectives in play simultaneously and ensure that all catch be made available to OS (therefore that EM halibut accounting not remove any halibut prior to the opportunity for OS to select those fish in the randomly drawn samples).

We knew from the outset that some halibut would inevitably be missed by the crew members while sorting at sea, so we arranged to have all landed halibut also counted and weighed. Tank information was recorded (aft, middle or forward) so as to attribute the number and weight of the delivered halibut to one specific haul (if only one haul per tank) or to a set of 2 hauls (2 hauls per tank). The term "fishing event" is used to distinguish the units to which each landed halibut can be uniquely associated (i.e. either a single haul or a set of two hauls). The true total halibut catch is the sum of the at-sea discard weights combined with the landing weights. The count and weight of total halibut in the catch is available at the fishing event level.

Observer sampling was conducted using new 2008 North Pacific Observer Program guidelines. The 2008 protocols require collecting up to three random sub-samples totaling approximately 300 kgs. Past protocols would have pooled these sub-samples. The observer samples were taken prior to any discarding so as to be as representative as possible of the total catch. For each haul, the halibut catch was estimated by extrapolating the ratio of halibut weight (or count) to sample weight (sum of the sub-sample weights) to the official total catch (OTC) estimate. On average, observer sampling fraction was 2.2% of the OTC (Table 2).

OTCs were calculated for 20 hauls using volumetric and density estimates. Length and average width and height measurements were collected for each codend using a standard Observer Program measuring tape. For most hauls, the codend was treated as a semi-ellipsoidal solid and volume calculated according to the appropriate formula. For trip 4, delivery weights obtained from the plant (Alaska Pacific Seafoods, Kodiak) were used as OTC for the 3 hauls (13-15) since the hauls were not mixed (one haul per RSW tank). For trip 6, 4 hauls (23-26) were less than 2 mt each, which precluded getting accurate volume estimates. For these hauls, a visual estimate was used as OTC.

DATA ANALYSIS

Dr. Vivian Haist of Victoria, B.C was contracted to perform statistical analyses of the data collected during the EM experimental study (Haist, 2008). Specifically, halibut estimates from observer sampling and EM methods were compared to halibut at-sea discard and total halibut catch estimates to determine the relative accuracy and precision of the two monitoring approaches. Additionally,

covariates were examined to see if they relate to errors in EM fish length measurements. Analyses and statistical tests were conducted at the haul level, fishing event level, trip level and study level, as appropriate.

RESULTS

EXPERIMENTAL FISHING

Six trips, 1-3 (usually 2) days per trip, with 3-7 hauls per day over the course of 12 fishing days were made from September 16 to October 14, 2007 (Table 1). Rough weather resulted in no travel or fishing activity from September 30th to October 7th. Table 2 summarizes the EFP quotas, caps and harvests.

Table 1. Summary of halibut catch (census and landings), halibut catch estimates (observer sampling and EM from reviewers EMR1 and EMR2), overall catch weight (OTC), haul information, and proportion (by weight) of catch in observer samples and proportion of halibut (by weight) in catch.

	Haul					Halibut weight (kg)						Halibut landed to plant	
Trip	#	Date (2007)	Set	Ret.	OTC (mt)	Cens.	Obs.	EMR1	EMR2	Prop. samp.	Prop. hal.	Tank	Number delivered (by tank)
1	1	16-Sep	17:45	19:20	36.58	3.6	0.0	2.5	3.6	0.009	0.000	F,M	Front: zero Middle: 16@129.7 kg Aft: 14@ 91.17 kg.
	2	17-Sep	8:00	8:45	15.35	172.2	0.0	176.9	188.2	0.018	0.011	M	
	3	17-Sep	11:00	12:00	12.97	129.5	0.0	120.7	118.1	0.020	0.010	A	
	4	17-Sep	13:35	14:16	9.98	54.3	0.0	54.9	57.5	0.032	0.005	A	
2	5	20-Sep	8:25	9:25	33.21	137.2	637.1	196.7	135.0	0.013	0.004	F,M	Front: 5 @ 34 kg. Middle: zero Aft: 2 @ 10.4 kg
	6	20-Sep	12:55	13:25	21.44	9.4	0.0	9.6	9.5	0.018	0.000	M	
	7	20-Sep	15:50	16:50	13.09	59.4	0.0	61.0	64.4	0.023	0.005	A	
	8	20-Sep	19:15	22:00	13.98	271.4	184.7	263.6	268.0	0.026	0.019	A	
3	9	24-Sep	13:35	14:01	5.79	0.0	0.0	0.0	0.0	0.052	0.000	F	Zero Halibut
	10	24-Sep	18:50	20:30	14.77	17.3	0.0	16.4	16.2	0.021	0.001	F	
	11	25-Sep	12:45	13:02	11.82	27.5	415.6	26.5	26.7	0.022	0.002	F,A	
	12	26-Sep	7:50	8:15	32.58	49.3	519.7	50.1	49.8	0.010	0.002	A	
4	13	28-Sep	21:00	23:50	8.71	37.2	0.0	39.7	41.2	0.030	0.004	F	Aft tank: 3 @ 9.98 kg.
	14	29-Sep	9:50	12:20	7.86	844.4	216.1	858.7	837.8	0.037	0.107	A	
	15	29-Sep	19:05	20:30	17.23	67.6	0.0	74.9	67.5	0.020	0.004	M	
5	16	8-Oct	13:37	14:05	18.15	391.9	238.1	411.3	387.4	0.016	0.022	F	Front tank: 1 @ 2.92 kg Middle tank: 1 @ 3.63 kg Aft tank: 2@ 13.61 kg
	17	8-Oct	18:30	19:02	10.18	94.4	0.0	92.5	93.1	0.027	0.009	F	
	18	9-Oct	8:10	8:59	16.85	33.9	0.0	33.4	30.3	0.018	0.002	M	
	19	9-Oct	10:55	12:11	21.67	122.4	0.0	124.2	122.7	0.017	0.006	M	
	20	9-Oct	14:40	16:05	19.13	152.7	0.0	164.0	145.9	0.016	0.008	A	
6	21	12-Oct	9:00	11:05	12.31	138.8	0.0	148.4	132.6	0.023	0.011	F	Middle tank: 6@ 22.23 kg.
	22	12-Oct	13:00	15:25	11.94	665.8	0.0	733.7	699.1	0.026	0.056	M	
	23	12-Oct	19:10	19:55	0.54	37.0	66.8	30.5	35.2	0.518	0.069	A	
	24	13-Oct	9:00	11:00	0.91	61.6	21.4	63.4	58.7	0.350	0.068	A	
	25	13-Oct	12:45	14:06	1.81	70.0	84.7	74.9	69.5	0.196	0.039	A	
	26	13-Oct	15:15	17:26	1.13	47.2	32.6	49.7	49.3	0.243	0.042	A	
	27	13-Oct	19:20	21:51	11.23	255.9	0.0	280.6	283.9	0.032	0.023	M	
Total					381.2	3951.	2416.	4158.	3991.	0.022	0.010		

Table 2. EFP quotas, caps and harvests in metric tons by quota/cap species category.

	EFP Quota	Harvested		Remainder	
	mt	mt	%	mt	%
Halibut mortality	12	2.9	24.2%	9.1	75.8%
Halibut catch	18	4.3	23.9%	13.6	75.6%
Sablefish*	13	10.9	83.8%	2.1	16.2%
Total Groundfish**	400	383.4	95.9%	16.5	4.1%

* Cap imposed by Permit holder - NMFS recommended a voluntary cap of 26 mt.

** Total groundfish wt. does not include halibut

EM SYSTEM PERFORMANCE

The EM system collected data over the course of six trips. The EM system performed well for all fishing trips with no system error caused data loss (Table 3). Out of a total of nearly 340 hours of operation, there were 8 minutes of lost sensor data due to a system wide GPS signal failure. This signal failure was also detected in other EM systems operating in British Columbia. Among the image data, the initial plan was to record imagery for 100% of the first trip and fishing events (FE) only thereafter. With some initial set up errors encountered during the first trip, image recording was set to fishing events only. All trips except trip 3 thereafter were set to record for the entire fishing trip. In total there were over 245 hours of imagery recorded with no data loss experienced.

The first two trips were to be 100% video to monitor retention of CQ species. Trip three was set to FE only; the belief being that video was needed only during fishing and stowing activities to monitor retention of CQ and discard of halibut. During trip 3, all but about 5 mt of a codend was dumped into one tank. Hoping the fish in the tank would settle so we could fit the entire bag into that same tank, the vessel steamed to another fishing area and video recording shut off shortly thereafter (when the hydraulics were shut off). The result was that there was no video with 5 tons of fish on deck including some halibut and salmon. It became obvious that 100% video was needed for all trips.

Table 3. Summary of EM data collected, summarized by fishing trip.

Trip #	Departure Date	Total # of Sets	Sensor Data Hours	Sensor Data % Success	Image Data Setting	Image Data Hours	Image Data % Success
1	16-Sep-07	4	41.95	99.7%	FE	9.42	100.0%
2	19-Sep-07	4	40.93	100.0%	Trip	40.93	100.0%
3	23-Sep-07	4	76.54	100.0%	FE	15.86	100.0%
4	28-Sep-07	3	47.87	100.0%	Trip	47.87	100.0%
5	7-Oct-07	5	69.47	100.0%	Trip	69.47	100.0%
6	11-Oct-07	7	62.28	100.0%	Trip	62.28	100.0%
Totals		**27**	**339.04**	**100.0%**		**245.82**	**100.0%**

FE = fishing event

Table 4 summarizes fishing events carried out in this study by time and duration of each event. A total of 79 hours was spent on the 27 fishing operations with the duration of each event ranging from one to eight hours and most taking less than three hours. Fishing time (doors out and net deployed) made up a little over half the total time while stowage time (net retrieval and stowage of catch) made up the balance. Image analysis activities focused on the stowage interval when fish are on deck being sorted, processed and stowed.

Table 4. Time and duration of fishing event by haul and trip.

Trip	Set	Fishing Event Start	Fishing Time	Stowage Time	Total Duration
1	1	9/16/07 5:35 PM	2:00	1:55	3:55
1	2	9/17/07 7:52 AM	1:06	0:44	1:50
1	3	9/17/07 10:56 AM	1:19	0:32	1:51
1	4	9/17/07 1:32 PM	1:00	0:48	1:48
2	1	9/20/07 8:16 AM	1:27	3:18	4:45
2	2	9/20/07 12:48 PM	0:55	0:57	1:52
2	3	9/20/07 3:44 PM	1:21	1:06	2:27
2	4	9/20/07 7:12 PM	2:56	0:49	3:45
3	1	9/24/07 1:30 PM	0:29	0:33	1:02
3	2	9/24/07 6:43 PM	1:59	0:49	2:48
3	3	9/25/07 12:40 PM	0:33	7:44	8:17
3	4	9/26/07 7:46 AM	0:46	2:57	3:43
4	1	9/28/07 8:53 PM	3:12	0:37	3:49
4	2	9/29/07 9:47 AM	2:43	1:13	3:56
4	3	9/29/07 6:59 PM	1:39	1:19	2:58
5	1	10/8/07 1:18 PM	0:54	1:37	2:31
5	2	10/8/07 6:25 PM	0:44	0:39	1:23
5	3	10/9/07 8:01 AM	1:03	0:44	1:47
5	4	10/9/07 10:48 AM	1:34	1:06	2:40
5	5	10/9/07 2:38 PM	1:36	1:01	2:37
6	1	10/12/07 9:06 AM	2:12	0:51	3:03
6	2	10/12/07 1:02 PM	2:36	0:53	3:29
6	3	10/12/07 7:12 PM	0:56	0:18	1:14
6	4	10/13/07 8:57 AM	2:18	0:32	2:50
6	5	10/13/07 12:43 PM	1:32	0:28	2:00
6	6	10/13/07 3:23 PM	2:23	0:16	2:39
6	7	10/13/07 7:24 PM	2:42	1:18	4:00
	Total		**44:04**	**35:04**	**79:08**

After the halibut measurements were completed, the imagery was examined for other discard events and the discarding of halibut by means other than through the pre-discard chute. There were eight incidents of discarding from the imagery examined (Table 5). In all but one case, the fish discarded were those that were tangled in the net and either discarded or left in the net when the net was wound back onto the reel. The number of pieces for these eight incidents ranged from one to eight. The last discard incident involved an estimated 40 individual red rockfish that appeared to be discarded after the holds were filled.

Table 5. Summary of discard observations made from examination of a sample of fishing events.

Trip	Date	Set	Time	Species	#	Comment
6	11-Oct-07	1	9:01	Unknown	4	When setting net, 4 pieces of fish fell out of net onto deck and were discarded.
6	11-Oct-07	2	15:58	Flatfish /roundfish	7	Wrapped in net and wound around drum as it is coming onboard. Two fall out as net is reset for next haul and kicked overboard. The other 5 are assumed to be in the net as it is reset.
6	11-Oct-07	4	8:55	roundfish	1	Fell out of net as it was being set - thrown overboard
6	11-Oct-07	5	12:44	Flatfish	8	Fell out of net as it was being set - thrown overboard
6	11-Oct-07	6	15:19	Flatfish	5	Caught in net from previous set, and were in net as it was re-set
6	11-Oct-07	7	21:56	Flatfish	4	Caught in net from previous set, and were in net as it was re-set
6	11-Oct-07	7	22:21	Flatfish /roundfish	6	Wrapped in net and wound around drum as it is coming onboard. Net is not re-set, so assumed that fish remained in net until cleaned.
3	23-Sep-07	4	11:46	Red Rockfish	40 ap.	Unable to positively determine due to camera angles, but appears as though crew member discarding through scupper due to vessel overloading.

IMAGE DATA – ANALYSIS RATIOS

Table 6 provides a summary of image analysis time associated with carrying out the two main types of image review at the set level: halibut counting and measurement. Overall, halibut monitoring review activities were carried out at about 70% of real time with individual events ranging from about 0.25 to over 2.5 (real time). The main variables affecting analysis ratio would be image quality, catch volume, number of halibut, and the manner which halibut pass across the measurement chute. The discard analysis was less time consuming, with an overall average of 0.38, about half that of the halibut analysis requirement. Again, variability in the time required per fishing event was high, ranging from 0.03 to 1.6. The main variables affecting discard assessment were image quality, volume and composition of catch, and the manner which the crew handled the catch.

Table 6. Summary of analysis ratios from fishing event level image viewing

				Halibut Review		Discard and Marine Debris		
Trip	Set	Image quality	Stowage Time	Analysis Hours	Analysis Ratio	Analysis Hours	Analysis Ratio	Comments
1	1		1.92	0.50	0.26			
1	2	High	0.73	0.75	1.02	0.12	0.16	
1	3		0.53	0.50	0.94			
1	4	High	0.80	0.75	0.94	0.13	0.17	
2	1		3.30	2.00	0.61			
2	2		0.95	1.00	1.05			
2	3	High	1.10	1.00	0.91	0.17	0.15	
2	4		0.82	1.25	1.53			
3	1	High	0.55	0.50	0.91	0.12	0.21	
3	2		0.82	0.75	0.92			
3	3	High	7.73	1.25	0.16	0.27	0.03	
3	4	Medium	2.95	0.75	0.25	0.38	0.13	Sun Glare
4	1		0.62	0.25	0.41			
4	2		1.22	2.00	1.64			
4	3	High	1.32	0.75	0.57	0.17	0.13	
5	1	Very low	1.62	1.50	0.93	0.22	0.13	Sun/ Shadows
5	2		0.65	0.50	0.77			
5	3		0.73	0.25	0.34			
5	4	High	1.10	0.75	0.68	0.13	0.12	
5	5	High	1.02	0.50	0.49	0.12	0.11	
6	1	High	0.85	1.00	1.18	0.50	0.59	
6	2	High	0.88	2.25	2.55	0.78	0.89	
6	3	High	0.30	0.25	0.83	0.48	1.61	
6	4	High	0.53	0.50	0.94	0.20	0.38	
6	5	High	0.47	0.25	0.54	0.18	0.39	
6	6	High	0.27	0.50	1.88	0.27	1.00	
6	7	High	1.30	1.50	1.15	0.35	0.27	
	Total		**35.07**	**23.75**	**0.68**	**4.58**	**0.38**	

The analysis ratios for whole fishing trip (trip 6) review included vessel transit time and time for fishing operations. The total duration of trip six was 63.3 hours, of which 4.6 hours was stowage time. The analysis ratio was 0.08 overall, 0.6 during fish operations and 0.04 during other periods.

EM DATA

The EM data collected during the experimental study are video-records of all halibut moving through the discard chute. Over all hauls, discarded halibut represented 1% of the total catch, by weight (Table 2). The video images were reviewed independently by two individuals (EMR1 and EMR2) to: 1) obtain a count of halibut, and 2) to measure individual fish lengths. In cases where there was no clear image for an individual halibut a comment was noted in the data summary.

Length Conversion Factors

For each haul, conversion factors for converting the video-record length measurements to actual fish size were estimated. The conversion factors were calculated from a known length grid system on the escape chute (Figure 1). There was some distortion in the video images such that conversion factors were different between the *top of grid* and *bottom of grid* measurements. Therefore, the *top of grid*, the *bottom of grid*, or an average of the two conversion factors could be used to calculate actual fish lengths from the raw video measurements.

For both EM reviewers, individual halibut lengths were estimated using conversion factors calculated for the *top of grid*, the *bottom of grid*, and for an average of the two sets of conversion factors. The mean halibut lengths from the census and from the alternative EM estimates are compared in Table 7. Error in the EM estimates, calculated as the proportional difference between the census and the EM estimates, range from -10.5% to 4.6% (Table 7). The mean error over all hauls ranged from -2.1% to 0.4%, depending on EM reviewer and length conversion method.

Hypothesis tests to investigate if the EM mean length estimates are biased were conducted for each EM reviewer and conversion method. A two-tailed t-test was used to test the null hypothesis that the mean error was equal to zero $(\alpha = 0.05)$. The null hypothesis was rejected for both EM reviewers using the *bottom of grid* conversion factors (p-values of 0.007 and <0.000), and for EMR2 using the *average* conversion factors (p-value <0.000), suggesting the *bottom of grid* and *average* conversion factors may result in biased results. Using the *top of grid* conversions, the null hypothesis is not rejected for either reviewer, indicating this is the preferable conversion method. All further analyses of the EM data are based on the *top of grid* conversion factors.

Table 7 Estimates of mean halibut length from the census and from the EM review, and the error in EM estimates (proportional difference) for each haul. EM estimates are calculated for the two reviewers (EMR1 and EMR2), using conversion factors calculated for the *top of grid*, the *bottom of grid*, or an average of the two sets. For each EM reviewer and conversion method, a t-test was conducted to test the null hypothesis that the mean error, across hauls, was zero. Probability values for these tests are shown in the table.

	Mean Length (cm)							Error (EM-Census)/Census					
		Top of Grid		*Bottom of Grid*		*Average Grid*		*Top of Grid*		*Bottom of Grid*		*Average Grid*	
Haul	Census	EMR1	EMR2	EMR1	EMR2	EMR1	EMR2	EMR1	EMR2	EMR1	EMR2	EMR1	EMR2
1	68.0	60.8	67.6	62.9	65.0	61.9	66.3	-0.105	-0.006	-0.075	-0.045	-0.090	-0.025
2	85.3	84.6	86.3	83.2	84.8	83.9	85.5	-0.009	0.011	-0.024	-0.007	-0.017	0.002
3	80.2	78.4	78.0	78.5	77.3	78.5	77.6	-0.022	-0.027	-0.021	-0.036	-0.021	-0.032
4	78.7	78.3	79.6	76.5	77.2	77.4	78.4	-0.005	0.012	-0.028	-0.018	-0.016	-0.003
5	76.2	79.6	75.8	78.8	74.2	79.2	75.0	0.045	-0.004	0.035	-0.025	0.040	-0.015
6	73.5	74.1	73.8	73.0	71.5	73.6	72.7	0.008	0.004	-0.007	-0.027	0.001	-0.011
7	79.9	80.2	81.8	77.9	79.2	79.1	80.5	0.004	0.023	-0.025	-0.008	-0.010	0.008
8	80.5	79.4	79.6	79.5	78.5	79.4	79.1	-0.013	-0.011	-0.012	-0.024	-0.013	-0.017
9	-	-	-	-	-	-	-						
10	59.9	58.8	58.7	57.1	58.0	57.9	58.3	-0.017	-0.020	-0.047	-0.031	-0.032	-0.025
11	76.2	76.0	76.0	73.7	74.8	74.9	75.4	-0.002	-0.003	-0.033	-0.018	-0.018	-0.011
12	86.8	87.2	86.6	86.9	85.9	87.0	86.3	0.004	-0.002	0.001	-0.011	0.002	-0.007
13	84.0	86.0	86.7	86.4	83.9	86.2	85.3	0.024	0.032	0.028	-0.002	0.026	0.015
14	70.1	70.4	69.8	70.1	68.3	70.2	69.0	0.004	-0.005	0.000	-0.025	0.002	-0.015
15	84.3	87.0	84.3	83.4	83.3	85.2	83.8	0.031	0.000	-0.011	-0.012	0.010	-0.006
16	77.0	77.9	76.9	75.1	75.2	76.5	76.0	0.012	-0.002	-0.024	-0.023	-0.006	-0.012
17	76.4	75.4	75.6	74.4	74.3	74.9	75.0	-0.013	-0.010	-0.026	-0.027	-0.020	-0.019
18	82.4	82.1	79.6	80.1	78.8	81.1	79.2	-0.004	-0.033	-0.028	-0.044	-0.016	-0.039
19	76.1	76.0	75.9	75.0	74.1	75.5	75.0	-0.001	-0.002	-0.014	-0.026	-0.007	-0.014
20	77.2	78.5	76.0	75.3	76.1	76.9	76.0	0.017	-0.016	-0.024	-0.015	-0.003	-0.015
21	73.6	75.2	72.3	73.6	71.5	74.4	71.9	0.021	-0.017	0.000	-0.028	0.011	-0.023
22	69.9	71.5	70.4	69.3	68.7	70.4	69.6	0.022	0.007	-0.009	-0.017	0.007	-0.005
23	80.5	82.5	79.1	82.0	78.9	82.2	79.0	0.025	-0.018	0.018	-0.020	0.021	-0.019
24	66.0	66.4	64.7	65.3	63.8	65.9	64.2	0.006	-0.019	-0.010	-0.034	-0.002	-0.027
25	68.6	69.8	69.6	67.5	68.3	68.7	68.9	0.019	0.014	-0.016	-0.004	0.002	0.005
26	73.3	76.7	74.1	74.9	73.1	75.8	73.6	0.046	0.010	0.021	-0.003	0.033	0.004
27	73.2	74.2	74.6	72.3	72.8	73.2	73.7	0.014	0.019	-0.013	-0.006	0.001	0.006
						Mean		0.004	-0.002	-0.013	-0.021	-0.004	-0.012
						Std. Dev.		0.028	0.016	0.023	0.012	0.025	0.013
						Probability		0.451	0.449	0.007	0.000	0.361	0.000

EM Image Clarity

While reviewing the EM images, each reviewer noted when obtaining a length measurement was compromised due to either an unclear image or the fish not lying flat on the grid surface. Example comments are shown in Table 8. Overall, the fraction of images that were not noted as unclear or otherwise problematic was 71% and 66% for reviewers EMR1 and EMR2, respectively (Table 9).

The accuracy of EM mean fish length estimates may be increased by exclusion of images that were considered unclear by the reviewer. The estimates of mean halibut length when unclear images are excluded from the calculations are shown in Table 9. For both EM reviewers, exclusion of unclear images does not result in biased mean length estimates (t-test with null hypothesis that mean error across all hauls is zero, Table 9).

For both reviewers, the standard deviation of the error increased when unclear images were excluded from the mean halibut length calculations (compare Table 7 top of grid errors with Table 9 errors). That is, the accuracy of the mean halibut lengths for individual hauls decreased when only clear images were used in the estimation, although there was no indication that the estimates were biased. The standard deviation of the error increased from 2.8% to 5.0% for EMR1 and from 1.6% to 5.2% for EMR2 (Table 7, Table 9). Hence it appears that exclusion of unclear images is not warranted.

Table 8. Example comments from EMR1 and EMR2 notes.

• Fish not flat on grid
• Image very blurry - difficult to get an accurate measurement
• Fish head under cover of grid.
• Fish tail bent
• Deck lighting changed: Fish are blurry and difficult to get an accurate measurement
• Fish not flat on grid (piled on top of other fish)
• Fish tail bent up against grid rail.
• Fish tail not flat on grid and nose of head is hidden from view
• Half of fish bent up against grid rail
• Fish nose not in view
• Tail straight up

Table 9 Estimates of mean halibut length from the census and from the EM reviews excluding unclear images, the error in EM estimates ([EM-Census]/Census), and the total number and number of clear images for each haul. EM estimates are calculated for the two reviewers (EMR1 and EMR2) based on the *top of grid* conversion factors. For each EM reviewer, a t-test was conducted to test the null hypothesis that the mean error across hauls was zero. Probability values for these tests are shown in the table.

	Census	EMR1					EMR2				
		Number					Number				
Haul	Mean length	All	Clear	Prop. clear	Mean length	Error	All	Clear	Prop. clear	Mean length	Error
1	68.0	1	0	0.00	-	-	1	1	1.00	67.6	-0.006
2	85.3	23	20	0.87	86.0	0.008	23	17	0.74	89.0	0.043
3	80.2	20	14	0.70	76.6	-0.044	20	12	0.60	76.9	-0.040
4	78.7	9	4	0.44	82.7	0.051	9	4	0.44	83.6	0.062
5	76.2	25	19	0.76	75.1	-0.014	25	18	0.72	75.7	-0.006
6	73.5	2	1	0.50	75.8	0.031	2	1	0.50	77.4	0.053
7	79.9	9	8	0.89	82.0	0.027	9	7	0.78	83.0	0.039
8	80.5	40	32	0.80	80.2	-0.003	40	28	0.70	80.5	0.001
9	-	0	0		-	-	0	-	-	-	-
10	59.9	7	4	0.57	56.6	-0.055	7	5	0.71	57.6	-0.037
11	76.2	5	4	0.80	73.8	-0.032	5	4	0.80	72.8	-0.044
12	86.8	6	5	0.83	89.0	0.025	6	5	0.83	89.7	0.033
13	84.0	5	3	0.60	89.7	0.068	5	5	1.00	86.7	0.032
14	70.1	199	164	0.82	70.6	0.008	199	150	0.75	69.7	-0.006
15	84.3	9	6	0.67	91.5	0.085	9	5	0.56	88.2	0.046
16	77.0	65	46	0.71	79.1	0.027	65	41	0.63	76.9	-0.002
17	76.4	16	11	0.69	77.7	0.018	16	9	0.56	79.8	0.045
18	82.4	5	5	1.00	82.1	-0.004	5	3	0.60	78.3	-0.050
19	76.1	21	19	0.90	76.6	0.007	21	16	0.76	77.9	0.025
20	77.2	26	22	0.85	76.4	-0.010	26	16	0.62	73.5	-0.048
21	73.6	27	16	0.59	79.3	0.077	27	8	0.30	73.5	-0.001
22	69.9	160	121	0.76	72.5	0.037	160	81	0.51	72.5	0.037
23	80.5	3	2	0.67	95.9	0.191	4	1	0.25	65.3	-0.189
24	66.0	18	12	0.67	67.0	0.015	18	11	0.61	64.1	-0.029
25	68.6	16	13	0.81	68.1	-0.007	15	11	0.73	67.2	-0.021
26	73.3	8	7	0.88	77.4	0.056	9	7	0.78	76.4	0.041
27	73.2	50	34	0.68	72.9	-0.004	50	32	0.64	73.3	0.001
Mean				0.71		0.022			0.66		-0.001
Std. dev				0.20		0.050			0.18		0.052
Probability						0.657					0.989

Lighting Conditions

It is possible that ambient light conditions influence the quality of the video images and hence the accuracy of the halibut length measurements. To examine this possibility each haul was assigned to one of the categories – day, night, or dawn/dusk based on the time the net was retrieved. The dawn/dusk category included retrieval times that occurred within a half hour of sunrise or sunset.

Accuracy of individual fish length measurements was estimated by comparing the census length with EM reviewer length. Hauls where the number of halibut enumerated differed between the census and the EM reviewer were not included in these measurements. Error in individual fish measurements was calculated as the proportional difference between the census and EM length.

A two-factor ANOVA was conducted to test for significant differences in the length measurement errors among the ambient light categories, between the two EM reviewers, and interactions between the two factors. Differences in the errors were not significant among the lighting condition categories, but were significant between the two EM reviewers (Table 10). The interaction of light conditions and reviewer was also not significant.

Table 10. Analysis of Variance summary table for the effect of EM reviewer and light conditions on error in length measurements.

Source of Variation	DF	SS	MS	F	P-value
EM reviewer	1	0.0246	0.0246	4.318	0.038
Light condition	1	0.0007	0.0007	0.131	0.718
Interaction	1	0.0135	0.0135	2.377	0.124
Residuals	757	4.3098	0.0057		

Between Reader Accuracy and Precision

Accuracy of individual fish length measurements was estimated by comparing the census length with EM reviewer length. Hauls where the number of halibut enumerated differed between the census of at-sea discards and the EM reviewer were not included in these measurements, as the association between census and reviewer lengths could not be established. Error was measured as the proportional difference between the two lengths.

Both reviewers of the EM video images produced accurate estimates of halibut lengths, with no indication of bias in either reviewer's measurements (Table 11). In terms of precision, EMR2 length estimates were somewhat more precise than EMR1 estimates, with error standard deviations of 6.8% versus 8.3%. As shown in Table 10, differences in the errors in length measurements between the EM reviewers are statistically significant.

Table 11. Mean, standard deviation, and sample size (N) of the errors ([EM-census]/census) in individual length measurements for the two reviewers, EMR1 and EMR2. The null hypothesis that the mean is equal to zero is tested, and the associated p-value given.

	Error			
Reviewer	mean	Std. Dev.	N	p-value
EMR1	0.007	0.083	382	0.08
EMR1	-0.004	0.068	379	0.26

The EM and at-sea census counts of halibut show a high level of agreement between the two methods for both EM reviewers (Table 12). EMR1 halibut counts were correct for 22 hauls (81%) and EMR2 counts were correct for 23 hauls (85%). The error in the counts (difference between census of at-sea discards and EM count) ranged from -1 to 2, and over all hauls the EMR1 halibut count was the same as the census and the EMR2 halibut count was one more than the at-sea census. There is no indication of bias in halibut counts from the EM method, and the standard deviation of the error in halibut counts (~ 0.5) gives an indication of the expected precision of EM halibut counts for individual hauls. There is, however, an indication of small variance between reviewers.

Table 12 Census and EM reader counts of halibut by haul and reader (EMR1 and EMR2).

	Count			Error (EM- Census)	
Haul	Census	EMR1	EMR2	EMR1	EMR2
1	1	1	1	0	0
2	22	23	23	1	1
3	20	20	20	0	0
4	9	9	9	0	0
5	25	25	25	0	0
6	2	2	2	0	0
7	9	9	9	0	0
8	40	40	40	0	0
9	0	0	0	0	0
10	7	7	7	0	0
11	5	5	5	0	0
12	6	6	6	0	0
13	5	5	5	0	0
14	200	199	199	-1	-1
15	9	9	9	0	0
16	65	65	65	0	0
17	16	16	16	0	0
18	5	5	5	0	0
19	21	21	21	0	0
20	26	26	26	0	0
21	27	27	27	0	0
22	158	160	160	2	2
23	4	3	4	-1	0
24	18	18	18	0	0
25	16	16	15	0	-1
26	9	8	9	-1	0
27	50	50	50	0	0
Total	775	775	776	0	1
Mean				0.000	0.037
Std. Dev.				0.555	0.518

Quantity of Halibut in Haul

It is possible that the rate that halibut are released through the discard chute influences the accuracy or precision of the EM length measurements. During the study there were no direct measurements of the rate at which halibut were released so the number of halibut discarded in each haul is taken as a proxy for processing speed.

Both accuracy and precision of EM length measurements could be affected by the quantity of halibut processed in each haul. To test for potential effects on accuracy, a linear regression was fit to the haul-specific mean proportional error in length measurements (dependent variable) and the halibut counts (independent variable). Data for the two reviewers was combined as an analysis of covariance did not indicate any between reviewer differences in the relationship. The null hypothesis of no trend in the mean errors related to the quantity of halibut processed is not rejected at the 0.05 probability level (Table 13, slope and intercept of relationship not significantly different than zero).

With no indication of a relationship between the accuracy of EM length measurements and the quantity of halibut in the haul, the precision of the measurements was investigated with a linear regression of the absolute value of the proportional error in individual fish measurements (dependent variable) and the number of halibut discarded (independent variables). Again, there was no indication of differences in the regression relationships between the two EM reviewers (analysis of covariance), so the data for the two reviewers was combined to increase the sample size. The null hypothesis that the slope of the relationship is zero is rejected at the $\alpha = 0.05$ significance level (one tailed test that slope is > 0, Table 13). These results suggest that the accuracy of EM measurements are not affected by the quantity of halibut processed in each haul but the precision of the measurements decreases as the quantity of halibut increases.

Table 13. Summary statistics for linear regression fits for 1) mean length error vs. halibut count and 2) absolute length errors vs. halibut count. Note that for the first regression relationship the p-value is based on a two-tailed test and for the second regression relationship the p-value is based on a one-tailed test.

Hypothesis	Coefficient	Value	Std. error	T	p-value
Accuracy: mean length error	Intercept	-0.0062	0.0053	-1.1617	0.2521
	Slope	0.0002	0.0002	1.1049	0.2756
Precision: absolute value of length error	Intercept	0.0264	0.0047	5.5832	0.0000
	Slope	0.0002	0.0001	1.8555	0.0319

PRECISION AND ACCURACY OF HALIBUT ESTIMATES

Observer Sampling

Observer sampling was conducted for each haul of the experimental fishing study. The sampling protocol was to take 2 to 3 sub-samples per haul, but for some hauls only a single sub-sample was taken (Table 14). For each haul, the ratio of halibut (by weight and count) to total sample weight was calculated and this ratio extrapolated to the total haul weight to estimate halibut in the catch:

$$R_h^* = \frac{\sum_{i=1}^{n_h} h_{h,i}^*}{\sum_{i=1}^{n} s_{h,i}}; \qquad H_h^* = R_h^* O_h$$

where n_h is the number of sub-samples in haul *h*,

$h_{h,i}^*$ is the halibut by weight or number in sub-sample *i* of haul *h*,

$s_{h,i}$ is the weight of sub-sample *i* of haul *h*,

R_h^* is the ratio of halibut (by weight or number) to sample weight in haul *h*,

O_h is the OTC weight of halibut in haul *h*,

H_h^* is the estimate of halibut (by weight or number) in haul *h*.

Sub-sample details and the extrapolated halibut estimates by haul are shown in Table 14. Halibut were present in the samples in 10 of the 27 hauls, and for these hauls the estimated weight of halibut ranged from 21.4 kg to 637.1 kg and the estimated number ranged from 8.2 to 99.9.

Variance of estimates

For ratio estimators, the formula for calculating the sampling variance of the estimate is an approximation that is valid only for large sample sizes (Cochran, 1977, page 153). This approximation is given by:

$$v\left(H_h^*\right) = O_h^2 v\left(R_h^*\right) \doteq O_h^2 \frac{\left(1-f_h\right)}{\bar{s}_h n_h \left(n_h - 1\right)} \sum_{i=1}^{n_h} \left(h_{h,i}^* - R_h^* s_{h,i}\right)^2$$

where f_h is the finite population correction $\left(f_h = \sum_{i=1}^{n_h} s_{h,i} \Big/ O_h \right)$. Note that no variance is assumed for the O_h estimates, which is not strictly correct.

An alternative approach is to estimate the number of halibut based on the mean per unit approach, $\tilde{H}_h^* = N_h \sum_{i=1}^{n_h} h_{h,i}^* \Big/ n_h$, where N_h is the number of potential sub-samples in the haul $\left(N_h = O_h n_h \Big/ \sum_{i=1}^{n_h} s_{h,i} \right)$. The two estimators, H_h^* and $\tilde{H}_h^*$, are equivalent. The variance of $\tilde{H}_h^*$ is given by:

$$v\left(\tilde{H}_h^*\right) = \frac{N_h^2\left(1 - f_h\right)}{n_h\left(n_h - 1\right)} \sum_{i=1}^{n_h} \left(h_{h,i}^* - \bar{h}_h^*\right).$$

Note that the second approach would be equivalent to the first if the size of all sub-samples was equal. The size of sub-samples is fairly uniform within hauls so the differences in variance estimates for the two approaches should be minor. The mean per unit approach for estimating the sampling variance of the halibut estimates is likely superior, given that the small samples sizes likely invalidate the large sample requirements of the approximate ratio variance estimator.

Standard errors of the halibut weight and count estimates were calculated using both the ratio and mean per unit formulas. The standard errors are large, generally of similar magnitude to the estimates. Standard errors are similar for the two methods, and neither method produced consistently larger estimates (Table 15). Note that for 17 hauls, there were no halibut in the observer samples resulting in standard error estimates of zero. For an additional 5 hauls only one observer sub-sample was taken so the standard errors are not defined for these hauls.

Table 14. Observer sampling data: number of sub-samples (n); weight and count of halibut and total weight by sub-sample; OTC weight, ratio of halibut weight and count to total sample weight, and extrapolated (Ext.) halibut weight and count by haul.

				Sub-sample wt (kg)			Halibut wt (kg)					Halibut count				
Trip	Haul	OTC (mt)	n	S1	S2	S3	S1	S2	S3	Ratio	Ext.	S1	S2	S3	Ratio	Ext.
1	1	36.58	2	167.9	161.1		0.0	0.0		0.000	0.0	0	0		0.000	0.0
	2	15.35	2	127.4	147.4		0.0	0.0		0.000	0.0	0	0		0.000	0.0
	3	12.97	3	93.0	83.5	80.6	0.0	0.0	0.0	0.000	0.0	0	0	0	0.000	0.0
	4	9.98	2	172.6	149.4		0.0	0.0		0.000	0.0	0	0		0.000	0.0
2	5	33.21	3	153.2	141.7	148.2	0.0	0.0	8.5	0.019	637.1	0	0	1	0.002	75.0
	6	21.44	3	133.5	107.5	147.2	0.0	0.0	0.0	0.000	0.0	0	0	0	0.000	0.0
	7	13.09	2	144.3	154.2		0.0	0.0		0.000	0.0	0	0		0.000	0.0
	8	13.98	2	175.6	187.7		4.8	0.0		0.013	184.7	1	0		0.003	38.5
3	9	5.79	2	142.5	157.6		0.0	0.0		0.000	0.0	0	0		0.000	0.0
	10	14.77	2	140.4	170.7		0.0	0.0		0.000	0.0	0	0		0.000	0.0
	11	11.82	2	118.9	145.7		0.0	9.3		0.035	415.6	0	1		0.004	44.7
	12	32.58	3	103.0	117.2	105.9	0.0	5.2	0.0	0.016	519.7	0	1	0	0.003	99.9
4	13	8.71	2	147.3	116.9		0.0	0.0		0.000	0.0	0	0		0.000	0.0
	14	7.86	1	287.4			7.9			0.027	216.1	1			0.003	27.3
	15	17.23	3	117.7	124.0	106.7	0.0	0.0	0.0	0.000	0.0	0	0	0	0.000	0.0
5	16	18.15	2	147.9	134.2		0.0	3.7		0.013	238.1	0	1		0.004	64.4
	17	10.18	2	129.1	146.3		0.0	0.0		0.000	0.0	0	0		0.000	0.0
	18	16.85	2	142.8	154.9		0.0	0.0		0.000	0.0	0	0		0.000	0.0
	19	21.67	3	105.7	135.9	120.1	0.0	0.0	0.0	0.000	0.0	0	0	0	0.000	0.0
	20	19.13	3	95.1	105.6	113.5	0.0	0.0	0.0	0.000	0.0	0	0	0	0.000	0.0
6	21	12.31	2	145.8	139.5		0.0	0.0		0.000	0.0	0	0		0.000	0.0
	22	11.94	2	155.0	152.5		0.0	0.0		0.000	0.0	0	0		0.000	0.0
	23	0.54	1	279.7			34.6			0.124	66.8	2			0.007	3.9
	24	0.91	1	317.8			7.5			0.024	21.4	2			0.006	5.7
	25	1.81	1	354.9			16.6			0.047	84.7	4			0.011	20.4
	26	1.13	1	274.1			7.9			0.029	32.6	2			0.007	8.2
	27	11.23	2	182.4	174.1		0.0	0.0		0.000	0.0	0	0		0.000	0.0

Table 15. Observer sampling estimates of halibut weight and number of halibut by haul, and their estimated standard errors based on ratio and mean per unit estimators.

	Halibut weight (kg)			Number of halibut		
		Standard Error			Standard Error	
Haul	Estimate	Ratio	Mean/unit	Estimate	Ratio	Mean/unit
1	0.0	0.0	0.0	0.0	0.0	0.0
2	0.0	0.0	0.0	0.0	0.0	0.0
3	0.0	0.0	0.0	0.0	0.0	0.0
4	0.0	0.0	0.0	0.0	0.0	0.0
5	637.1	632.0	632.9	75.0	74.4	74.5
6	0.0	0.0	0.0	0.0	0.0	0.0
7	0.0	0.0	0.0	0.0	0.0	0.0
8	184.7	188.4	182.3	38.5	39.2	38.0
9	0.0	0.0	0.0	0.0	0.0	0.0
10	0.0	0.0	0.0	0.0	0.0	0.0
11	415.6	369.3	410.9	44.7	39.7	44.2
12	519.7	496.9	517.1	99.9	95.6	99.4
13	0.0	0.0	0.0	0.0	0.0	0.0
14	216.1	-	-	27.3	-	-
15	0.0	0.0	0.0	0.0	0.0	0.0
16	238.1	247.8	236.3	64.4	67.0	63.9
17	0.0	0.0	0.0	0.0	0.0	0.0
18	0.0	0.0	0.0	0.0	0.0	0.0
19	0.0	0.0	0.0	0.0	0.0	0.0
20	0.0	0.0	0.0	0.0	0.0	0.0
21	0.0	0.0	0.0	0.0	0.0	0.0
22	0.0	0.0	0.0	0.0	0.0	0.0
23	66.8	-	-	3.9	-	-
24	21.4	-	-	5.7	-	-
25	84.7	-	-	20.4	-	-
26	32.6	-	-	8.2	-	-
27	0.0	0.0	0.0	0.0	0.0	0.0

Hypothesis Tests

Hypothesis tests were conducted to assess whether the halibut number and weight estimates derived from observer sampling were significantly different than the at-sea discard census estimates. The null hypothesis tested was that the differences between the census and observer sampling estimates had a mean of zero. Two-tailed t-tests $(\alpha = 0.05)$ were conducted for individual hauls, trips, and over the study. The mean per unit estimators of standard errors were used for conducting the hypothesis tests.

Hypotheses tests could only be conducted for 5 of the 27 hauls; the remainder had either only one sub-sample or had standard error estimates of zero. The null hypotheses of no differences between the observer sampling estimates and the at-sea discard census of halibut weights and counts were not

rejected for these 5 hauls (Table 16). Hypotheses tests at the trip level, conducted for 3 of the 6 trips, rejected the null hypothesis in one case – the observer biomass estimate for trip 5 (Table 16). For the combined trips, 2, 3, and 5, the null hypotheses were also not rejected.

Additional hypotheses tests were conducted to test if the mean proportion error in the halibut estimates ([observer-census]/census) indicated bias in the observer estimates. Across both hauls and trips, the mean proportion errors were not significantly different than zero (Table 16).

The observer basket sampling should be representative of the total halibut catch, not just halibut enumerated in the at-sea discard census, so more appropriate hypotheses tests would compare observer estimates to the total halibut catch. Halibut that were landed (and therefore not in the at-sea discard census) could not always be attributed to a single haul but rather to a set of two hauls. Total halibut weights and counts (at-sea discard census plus landings) were calculated for hauls or sets of hauls for which the landings could be uniquely attributed (Table 17).

The hypotheses tests described above were repeated comparing observer estimates with the total halibut catch. Results were the same as for the tests comparing observer estimates with the census values. The null hypothesis of no difference between the observer estimates and total halibut weights and counts was rejected in just one case – the observer biomass estimate for trip 5 (Table 18).

Non-parametric statistical tests may be more appropriate to test for bias in the observer-based halibut estimates, as the distribution of errors is unlikely to be normal. The Wilcoxon signed-rank test is appropriate to test whether the proportional errors in halibut estimates are significantly different than zero. This test was conducted for proportional errors in the halibut counts and weights at the haul and fishing event level. For the haul-based errors, the null hypothesis that the proportional errors were equal to zero was rejected for both the halibut weights and counts (p-values of 0.019 and 0.015 for weights and counts, respectively). For the fishing event-based estimates, the null hypothesis that the proportional errors were equal to zero was not rejected for either the halibut weights or counts (p-values of 0.137 and 0.111 for weights and counts, respectively). For the haul-based proportional errors these test results are different than those from the parametric tests. The large number of hauls that had no halibut in the observer samples (17 of 27) results in a preponderance of negative proportional errors and hence rejection of the hypothesis that the median error is zero.

Table 16. Comparison of halibut biomass (kg) and count estimates (N) from observer basket samples with at-sea census values, by haul and trip. Error is measured as the proportional difference between observer and census values ([observer-census]/census), and the null hypothesis that the mean error across hauls is equal to zero is tested. Where sample sizes are adequate and halibut were sampled, the null hypothesis that of no difference between the census value and observer estimates is tested for individual hauls and trips.

		Census		Observer biomass estimate				Observer count estimate			
Trip	Haul	Kg.	N	Est.	St. Error	p-value	Error	Est.	St. Error	p-value	Error
1	1	3.6	1	0.0	0.0		-1.00	0.0	0.0		-1.00
	2	172.2	22	0.0	0.0		-1.00	0.0	0.0		-1.00
	3	129.5	20	0.0	0.0		-1.00	0.0	0.0		-1.00
	4	54.3	9	0.0	0.0		-1.00	0.0	0.0		-1.00
	Trip total	359.5	52	0.0	0.0		-1.00	0.0	0.0		-1.00
2	5	137.2	25	637.1	632.9	0.51	3.64	75.0	74.5	0.57	2.00
	6	9.4	2	0.0	0.0		-1.00	0.0	0.0		-1.00
	7	59.4	9	0.0	0.0		-1.00	0.0	0.0		-1.00
	8	271.4	40	184.7	182.3	0.72	-0.32	38.5	38.0	0.97	-0.04
	Trip total	477.4	76	821.8	658.6	0.62	0.72	113.4	83.6	0.67	0.49
3	9	0.0	0	0.0	0.0			0.0	0.0		
	10	17.3	7	0.0	0.0		-1.00	0.0	0.0		-1.00
	11	27.5	5	415.6	410.9	0.52	14.11	44.7	44.2	0.53	7.94
	12	49.3	6	519.7	517.1	0.46	9.54	99.9	99.4	0.44	15.66
	Trip total	94.1	18	935.3	660.5	0.26	8.94	144.6	108.8	0.30	7.03
4	13	37.2	5	0.0	0.0		-1.00	0.0	0.0		-1.00
	14	844.4	200	216.1	-		-0.74	27.3	-		-0.86
	15	67.6	9	0.0	0.0		-1.00	0.0	0.0		-1.00
	Trip total	949.2	214	216.1	-		-0.77	27.3	-		-0.87
5	16	391.9	65	238.1	236.3	0.63	-0.39	64.4	63.9	0.99	-0.01
	17	94.4	16	0.0	0		-1.00	0.0	0.0		-1.00
	18	33.9	5	0.0	0.0		-1.00	0.0	0.0		-1.00
	19	122.4	21	0.0	0.0		-1.00	0.0	0.0		-1.00
	20	152.7	26	0.0	0.0		-1.00	0.0	0.0		-1.00
	Trip total	795.2	133	238.1	236.3	0.05	-0.70	64.4	63.9	0.32	-0.52
6	21	138.8	27	0.0	0.0		-1.00	0.0	0.0		-1.00
	22	665.8	158	0.0	0.0		-1.00	0.0	0.0		-1.00
	23	37.0	4	66.8	-		0.81	3.9	-		-0.03
	24	61.6	18	21.4	-		-0.65	5.7	-		-0.68
	25	70.0	16	84.7	-		0.21	20.4	-		0.28
	26	47.2	9	32.6	-		-0.31	8.2	-		-0.08
	27	255.9	50	0.0	0.0		-1.00	0.0	0.0		-1.00
	Trip total	1276.3	282	205.5	-		-0.84	38.2	-		-0.86
	Trips 2+3+5	1366.7	227	1995.2	962.2	0.52	0.46	322.4	151.3	0.54	0.42
	All trips	3951.7	775	2416.7				388.0			
	Mean over hauls						0.380				0.314
	Std. error						0.699				0.709
	P-valuel						0.59				0.66
	Mean over trips						1.058				0.712
	Std error						1.597				1.284
	P-value						0.54				0.60

Table 17. Number (N) and weight (kg) of halibut in census, landings records, and total (census plus landings) by haul or sets of hauls for which landings are uniquely defined.

	At-sea Census		Landing		Total	
Haul	Kg.	N	Kg.	N	Kg.	N
1,2	129.7	16	175.8	23	305.5	39
3,4	91.2	14	183.7	29	274.9	43
5	34.0	5	137.2	25	171.2	30
6	0.0	0	9.4	2	9.4	2
7,8	10.4	2	330.8	49	341.2	51
9	0.0	0	0.0	0	0.0	0
10	0.0	0	17.3	7	17.3	7
11	0.0	0	27.5	5	27.5	5
12	0.0	0	49.3	6	49.3	6
13	0.0	0	37.2	5	37.2	5
14	10.0	3	844.4	200	854.4	203
15	0.0	0	67.6	9	67.6	9
16,17	2.9	1	486.3	81	489.2	82
18,19	3.6	1	156.3	26	159.9	27
20	13.6	2	152.7	26	166.3	28
21	0.0	0	138.8	27	138.8	27
22,27	22.2	6	921.7	208	944.0	214
23	0.0	0	37.0	4	37.0	4
24	0.0	0	61.6	18	61.6	18
25	0.0	0	70.0	16	70.0	16
26	0.0	0	47.2	9	47.2	9

Table 18. Comparison of halibut weight (kg) and count estimates (N) from observer samples with total values, by haul and trip. Error is measured as the proportional difference between observer and total values ([observer-total]/total), and the null hypothesis that the mean error across hauls is equal to zero is tested. Where sample sizes are adequate and halibut were sampled, the null hypothesis of no difference between the total value and observer estimates is tested for individual hauls and trips.

	Fishing event	Total (at-sea census + landings)		Observer weight estimate				Observer count estimate			
Trip	(hauls)	Kg.	N	Kg.	Std. error	p-value	error	N	Std. error	p-value	Error
1	1,2	305.5	39	0.0	0.0		-1.00	0.0	0.0		-1.00
	3,4	274.9	43	0.0	0.0		-1.00	0.0	0.0		-1.00
	Trip total	580.4	82	0.0	0.0		-1.00	0.0	0.0		-1.00
2	5	171.2	30	637.1	632.9	0.54	2.72	75.0	74.5	0.61	1.50
	6	9.4	2	0.0	0.0		-1.00	0.0	0.0		-1.00
	7,8	341.2	51	184.7	182.3	0.48	-0.46	38.5	38.0	0.77	-0.25
	Trip total	521.8	83	821.8	658.6	0.66	0.58	113.4	83.6	0.73	0.37
3											
	9	0.0	0	0.0	0.0			0.0	0.0		
	10	17.3	7	0.0	0.0		-1.00	0.0	0.0		-1.00
	11	27.5	5	415.6	410.9	0.52	14.11	44.7	44.2	0.53	7.94
	12	49.3	6	519.7	517.1	0.46	9.54	99.9	99.4	0.44	15.66
	Trip total	94.1	18	935.3	660.5	0.26	8.94	144.6	108.8	0.30	7.03
4	13	37.2	5	0.0	0.0		-1.00	0.0	0.0		-1.00
	14	854.4	203	216.1	-		-0.75	27.3	-		-0.87
	15	67.6	9	0.0	0.0		-1.00	0.0	0.0		-1.00
	Trip total	959.2	217	216.1	-		-0.77	27.3	-		-0.87
5	16,17	489.2	82	238.1	236.3	0.40	-0.51	64.4	63.9	0.81	-0.22
	18,19	159.9	27	0.0	0.0		-1.00	0.0	0.0		-1.00
	20	166.3	28	0.0	0.0		-1.00	0.0	0.0		-1.00
	Trip total	815.4	137	238.1	236.3	0.04	-0.71	64.4	63.9	0.29	-0.53
6	21	138.8	27	0.0	0.0		-1.00	0.0	0.0		-1.00
	22,27	944.0	214	0.0	0.0		-1.00	0.0	0.0		-1.00
	23	37.0	4	66.8	-		0.81	3.9	-		-0.03
	24	61.6	18	21.4	-		-0.65	5.7	-		-0.68
	25	70.0	16	84.7	-		0.21	20.4	-		0.28
	26	47.2	9	32.6	-		-0.31	8.2	-		-0.08
	Trip total	1298.5	288	205.5	-		-1.00	38.2	-		-0.87
	Trip 2+3+5	1431.3	238	1995.2	962.2	0.57	0.39	322.4	151.3	0.59	0.35
	All trips	4269.4	825	2416.7			-0.43	388.0			-0.53
Mean over fishing events							0.735				0.662
	Std. error						0.887				0.908
	P-value						0.42				0.47
	Mean over trips						1.031				0.688
	Std error						1.598				1.286
	P-value						0.55				0.62

Bootstrap distribution

An alternative to the analytical survey-based method for estimating uncertainty in halibut estimates is the bootstrap approach (Efron and Tibshirani, 1998). Bootstrap methods do not require assumptions about the underlying distribution of the population being sampled (normal distribution with constant homogeneous variance), so can be superior to classical statistical methods when those assumptions are not met.

The bootstrap procedure follows the experimental sampling design. The trips and hauls are treated as fixed design elements, rather than part of a random selection process. Therefore, for each bootstrap replicate each haul is sampled and then sub-samples are randomly selected with replacement. The ratio of halibut to sample weight for the selected sub-samples is calculated and prorated to the OTC weight for the haul. Halibut weights are summed across all hauls to generate each bootstrap replicate and the resultant distribution of halibut weight and numbers reflect the uncertainty due to the sampling process. The bootstrap procedure was applied to the entire study (6 trips) and to combined trips 2, 3, and 5. 2000 bootstrap replicates were generated to represent the uncertainty in the halibut estimates. Note that while the number of unique combinations of sub-samples in each haul is small (3 combinations when there are 2 sub-samples and 10 combinations when there are 3 sub-samples), the number of unique combinations across the study (27 hauls) is large (order of $1e^{14}$).

The bootstrap and analytical estimates of halibut weight and numbers, and their 95% confidence intervals, are compared with the total values (census of at-sea discards plus landings) in Table 19. The bootstrap frequency distributions of weight estimates are shown in Figure 3. The bootstrap confidence intervals are narrower than the analytical estimates, but for the "all trips combined" the 95% limits do not encompass the total weight or numbers of halibut caught. For combined trips 2, 3, and 5, both the bootstrap and analytical 95% confidence limits encompass the census of at-sea discards plus landings values. For the bootstrap distributions of weight estimates the coefficients of variation (c.v.s) are 32% for all trips combined and 38% for trips 2, 3, and 5 combined.

Table 19. Halibut weight (kg) and numbers from the total estimate (census plus landings) and from observer sampling using bootstrap and analytical approaches for all trips and combined trips 2, 3, and 5. 95% confidence intervals are given in parentheses.

	Weight (kg)			Number		
		Observer-based estimates			Observer-based estimates	
	Total	Bootstrap	Analytical	Total	Bootstrap	Analytical
All trips	4269.4	2388.3 (1021.8 - 3928.6)	2416.7	825	384.5 (168.4 - 628.4)	388.0
Trips 2,3,5	1431.3	1942.0 (600.3 - 3429.8)	1995.2 (109.6 - 3881.4)	238	315.9 (102.8 - 558.1)	322.4 (25.9 - 618.9)

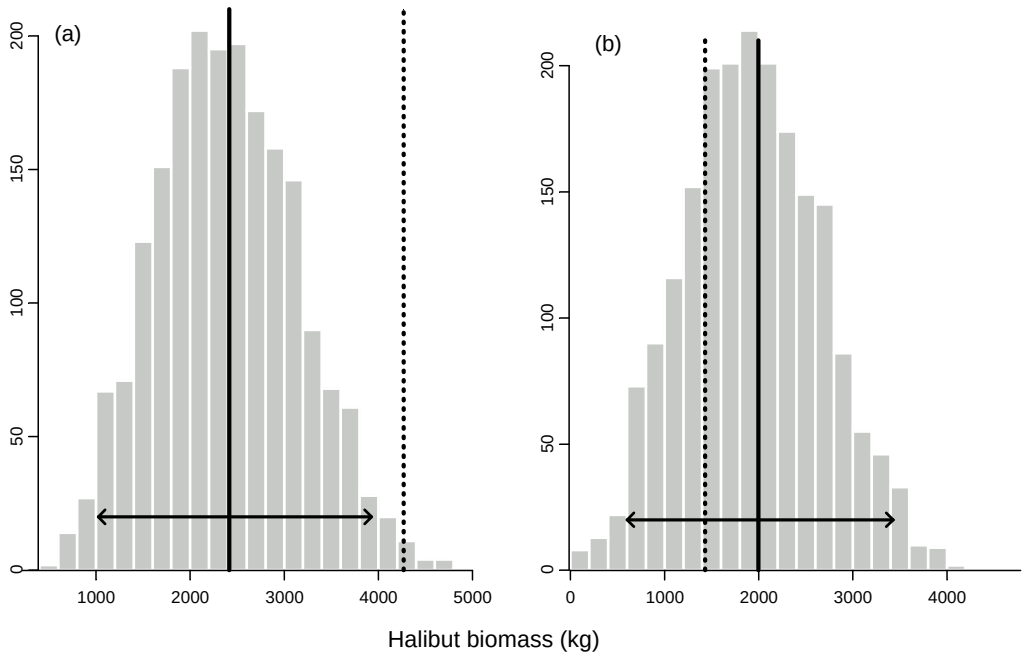

Figure 3. Bootstrap frequency distribution of observer-based halibut weight (kg) for: (a) all trips and (b) combined trips 2, 3, and 5. Actual values (census of at-sea discards plus landings) are shown by the dashed vertical lines; observer-based estimates are shown by solid vertical lines with the 95% confidence interval shown by the horizontal arrows.

EM METHOD

The EM method for estimating halibut catch is not based on sampling theory. All halibut are enumerated and their images measured to estimate their length. Lengths are converted to weight (based on standard IPHC conversions) and weights summed to estimate the halibut weight for each haul (Table 20). Uncertainty arises because counts and length estimates have associated errors, rather than through a sampling process. Accuracy and precision estimates for this method are based on the error of the EM relative to the census.

Errors in EM estimates are calculated as proportional differences, for halibut biomass and numbers. The error in EM biomass estimates ranges from –30% to 43% across all hauls, with means of 2.2% and 0.1% for EMR1 and EMR2, respectively (Table 19). For halibut count estimates, the errors range from –25% to 2% with means of –1.1% and 0.0% for EMR1 and EMR2, respectively. When biomass and count estimates are summed across hauls within fishing trips, the mean error for biomass estimates increases slightly and the mean error for count estimates decreases (Table 20). The null hypothesis that the mean errors are equal to zero is not rejected for any of the tests conducted (biomass and counts across hauls and trips for EMR1 and EMR2, Table 20). This supports that conclusion that there is no evidence of bias in the EM estimates of halibut biomass and catch.

The standard deviations of the errors in the EM halibut weight and count estimates provide an indication of the expected precision of this methodology. On a haul basis, the standard deviation of the error in weight estimates was 11.9% and 5.6% for EMR1 and EMR2, respectively. On a trip basis, these values decreased to 5.0% and 2.3% for the two reviewers (Table 20). For the halibut count estimates, the standard deviation of the error was substantially lower at the trip level (0.8% and 0.8% for EMR1 and EMR2, respectively) than at the haul level (5.3% and 1.5% for EMR1 and EMR2, respectively).

Equivalent error calculations and hypotheses tests were conducted comparing EM-based halibut estimates to the total halibut estimates (census plus landings), as was done for the observer sampling. The EM method is designed to measure discards, so it should provide estimates that are closer to the census of at-sea discard values than the total catch values.

The errors in halibut weight and number estimates generally increase when EM-based estimates are compared with the total (census of at-sea discards plus landings values) rather than the census of at-sea discards values (Table 21). The standard deviation of the weight errors across hauls increases from 11.9% to 14.3% for EMR1 and from 5.6% to 12.3% for EMR2. The standard deviations estimated across fishing trips increase to an even greater degree (Table 20, Table 21).

The null hypothesis that the error in EM biomass and number estimates (relative to the total values) is zero is rejected at this level for both EMR1 and EMR2 when evaluated across hauls (Table 21). This result is not surprising, given the EM method surveyed discards only, not the entire catch and substantial numbers of halibut were landed for some trips. Bias in the EM estimates relative to total catch would be expected.

Table 20. Comparison of EM estimates (EMR1 and EMR2) with at-sea discard census values for halibut count and biomass by haul and trip. EM errors are calculated as proportional differences ([EM-census]/census), and the null hypothesis that the mean error across hauls and trips is equal to zero is tested.

		Census		EM biomass				EM number			
				Kg.		Error		N		Error	
Trip	Haul	Kg.	N	EMR1	EMR2	EMR1	EMR2	EMR1	EMR2	EMR1	EMR2
1	1	3.6	1	2.5	3.6	-0.30	-0.02	1	1	0.00	0.00
	2	172.2	22	176.9	188.2	0.03	0.09	23	23	0.05	0.05
	3	129.5	20	120.7	118.1	-0.07	-0.09	20	20	0.00	0.00
	4	54.3	9	54.9	57.5	0.01	0.06	9	9	0.00	0.00
	Trip total	359.5	52	355.1	367.2	-0.01	0.02	53	53	0.02	0.02
2	5	137.2	25	196.7	135.0	0.43	-0.02	25	25	0.00	0.00
	6	9.4	2	9.6	9.5	0.02	0.01	2	2	0.00	0.00
	7	59.4	9	61.0	64.4	0.03	0.08	9	9	0.00	0.00
	8	271.4	40	263.6	268.0	-0.03	-0.01	40	40	0.00	0.00
	Trip total	477.4	76	530.8	476.9	0.11	0.00	76	76	0.00	0.00
3	9	0.0	0	0.0	0.0						
	10	17.3	7	16.4	16.2	-0.05	-0.06	7	7	0.00	0.00
	11	27.5	5	26.5	26.7	-0.04	-0.03	5	5	0.00	0.00
	12	49.3	6	50.1	49.8	0.02	0.01	6	6	0.00	0.00
	Trip total	94.1	18	92.9	92.8	-0.01	-0.01	18	18	0.00	0.00
4	13	37.2	5	39.7	41.2	0.07	0.11	5	5	0.00	0.00
	14	844.4	200	858.7	837.8	0.02	-0.01	199	199	-0.01	-0.01
	15	67.6	9	74.9	67.5	0.11	0.00	9	9	0.00	0.00
	Trip total	949.2	214	973.3	946.5	0.03	0.00	213	213	0.00	0.00
5	16	391.9	65	411.3	387.4	0.05	-0.01	65	65	0.00	0.00
	17	94.4	16	92.5	93.1	-0.02	-0.01	16	16	0.00	0.00
	18	33.9	5	33.4	30.3	-0.01	-0.11	5	5	0.00	0.00
	19	122.4	21	124.2	122.7	0.02	0.00	21	21	0.00	0.00
	20	152.7	26	164.0	145.9	0.07	-0.04	26	26	0.00	0.00
	Trip total	795.2	133	825.4	779.5	0.04	-0.02	133	133	0.00	0.00
6	21	138.8	27	148.4	132.6	0.07	-0.04	27	27	0.00	0.00
	22	665.8	158	733.7	699.1	0.10	0.05	160	160	0.01	0.01
	23	37.0	4	30.5	35.2	-0.18	-0.05	3	4	-0.25	0.00
	24	61.6	18	63.4	58.7	0.03	-0.05	18	18	0.00	0.00
	25	70.0	16	74.9	69.5	0.07	-0.01	16	15	0.00	-0.06
	26	47.2	9	49.7	49.3	0.05	0.05	8	9	-0.11	0.00
	27	255.9	50	280.6	283.9	0.10	0.11	50	50	0.00	0.00
	Trip total	1276.3	282	1381.1	1328.3	0.08	0.04	282	283	0.00	0.00
	All trips	3951.7	775	4158.7	3991.1	0.05	0.01	775	776	0.00	0.00
	Mean over hauls					0.022	0.001			-0.011	0.000
	Std. dev.					0.119	0.056			0.053	0.015
	p-value					0.36	0.95			0.28	0.91
	Mean over trips					0.039	0.004			0.002	0.003
	Std. dev.					0.050	0.023			0.008	0.008
	p-value					0.12	0.68			0.51	0.41

Table 21. Comparison of EM estimates (EMR1 and EMR2) with total values (at-sea census of discards plus landings) for halibut count and biomass by haul and trip. EM errors are calculated as proportional differences ([EM-census]/census), and the null hypothesis that the mean error across hauls and trips is equal to zero is tested.

		Total		EM biomass (Kg.)				EM number			
				Estimate		Error		Estimate		Error	
Trip	Haul	Kg.	N	EMR1	EMR2	EMR1	EMR2	EMR1	EMR2	EMR1	EMR2
1	1,2	305.5	39	179.5	191.7	-0.41	-0.37	24	24	-0.38	-0.38
	3,4	274.9	43	175.6	175.5	-0.36	-0.36	29	29	-0.33	-0.33
	trip total	580.4	82	355.1	367.2	-0.39	-0.37	53	53	-0.35	-0.35
2	5	171.2	30	196.7	135.0	0.15	-0.21	25	25	-0.17	-0.17
	6	9.4	2	9.6	9.5	0.02	0.01	2	2	0.00	0.00
	7,8	341.2	51	324.5	332.3	-0.05	-0.03	49	49	-0.04	-0.04
	trip total	521.8	83	530.8	476.9	0.02	-0.09	76	76	-0.08	-0.08
3											
	9	0.0	0	0.0	0.0			0	0		
	10	17.3	7	16.4	16.2	-0.05	-0.06	7	7	0.00	0.00
	11	27.5	5	26.5	26.7	-0.04	-0.03	5	5	0.00	0.00
	12	49.3	6	50.1	49.8	0.02	0.01	6	6	0.00	0.00
	trip total	94.1	18	92.9	92.8	-0.01	-0.01	18	18	0.00	0.00
4	13	37.2	5	39.7	41.2	0.07	0.11	5	5	0.00	0.00
	14	854.4	203	858.7	837.8	0.01	-0.02	199	199	-0.02	-0.02
	15	67.6	9	74.9	67.5	0.11	0.00	9	9	0.00	0.00
	trip total	959.2	217	973.3	946.5	0.01	-0.01	213	213	-0.02	-0.02
5	16,17	489.2	82	503.7	480.6	0.03	-0.02	81	81	-0.01	-0.01
	18,19	159.9	27	157.7	153.0	-0.01	-0.04	26	26	-0.04	-0.04
	20	166.3	28	164.0	145.9	-0.01	-0.12	26	26	-0.07	-0.07
	trip total	815.4	137	825.4	779.5	0.01	-0.04	133	133	-0.03	-0.03
6	21	138.8	27	148.4	132.6	0.07	-0.04	27	27	0.00	0.00
	22,27	944.0	214	1014.2	983.0	0.07	0.04	210	210	-0.02	-0.02
	23	37.0	4	30.5	35.2	-0.18	-0.05	3	4	-0.25	0.00
	24	61.6	18	63.4	58.7	0.03	-0.05	18	18	0.00	0.00
	25	70.0	16	74.9	69.5	0.07	-0.01	16	15	0.00	-0.06
	26	47.2	9	49.7	49.3	0.05	0.05	8	9	-0.11	0.00
	Trip total	1298.5	288	1381.1	1328.3	0.06	0.02	282	283	-0.02	-0.02
	Study total	4269.4	825	4158.7	3991.1	-0.03	-0.07	775	776	-0.06	-0.06
	Mean over hauls					-0.021	-0.060			-0.072	-0.057
	Std. dev.					0.143	0.123			0.117	0.110
	p-value					0.05	0.04			0.01	0.03
	Mean over trips					-0.071	-0.105			-0.097	-0.097
	Std. dev.					0.178	0.150			0.147	0.147
	p-value					0.37	0.15			0.17	0.17

Bootstrap distribution

A bootstrap-type approach was also applied to the EM data. As for the observer sampling data, the bootstrap procedure followed the experimental design of the EM component of the study. However, because the EM method did not involve random sampling, a random component was introduced by including random error in each of the halibut length measurements and in the count of the number of fish.

Errors were calculated as follows:

For each haul, the error in the number of enumerated fish was calculated (EM count – Census count, *count error*). The error in individual fish measurements was calculated as the proportional difference between the EM and census length ([EM length – census length]/census length). Hauls where the number of halibut enumerated differed between the census and the EM reviewer were not included in these measurements, as the association between census and reviewer lengths could not be established. For each haul where length errors could be determined, the *haul mean length error* was calculated. Finally, the *haul mean length error* was subtracted from individual fish length errors to generate a series of *fish length errors* with mean zero across each haul.

To generate bootstrap replicates, each of the hauls was re-sampled. For each haul a *count error* and a *haul mean length error* was randomly selected. Then the lengths of each of the fish in the census was adjusted based on the *haul mean length error* and a randomly selected *fish length error*. Each modified length was translated to weight, and the mean weight for the haul calculated. Finally, the haul weight was calculated based on the count of fish in the census adjusted by the randomly selected *count error*. 2000 bootstrap replicates were generated to represent the bootstrap distribution of uncertainty in the weight of halibut discards for the study.

The bootstrap and analytical estimates of halibut weight and numbers, and 95% confidence intervals for the bootstrap distribution, are compared with the census values in Table 19. The bootstrap frequency distributions of weight estimates are shown in Figure 4. For both EM reviewers, the 95% bootstrap confidence intervals include the census values. The distribution of weight estimates is tighter for EMR2 than EMR1, with c.v.s of 2.4% and 3.5%, respectively. The c.v.s for the estimates of halibut numbers are even smaller at 0.33% and 0.36% for EMR2 and EMR1, respectively.

Table 22. Halibut weights (kg) and numbers from the census of at-sea discards and from the EM analytical and bootstrap methods for EMR1 and EMR2. 95% confidence intervals are given in parentheses.

	Weight (kg)			Number		
	At-sea Census	EM-based estimates		At-sea Census	EM-based estimates	
		Bootstrap	Analytical		Bootstrap	Analytical
EMR1	3951.7	4093.3 (3788.2 - 4384.7)	4158.7	775	775.0 (770.0 – 781.0)	775
EMR2		3984.2 (3820.8 – 4193.7)	3991.1		775.9 (771.0 – 181.0)	776

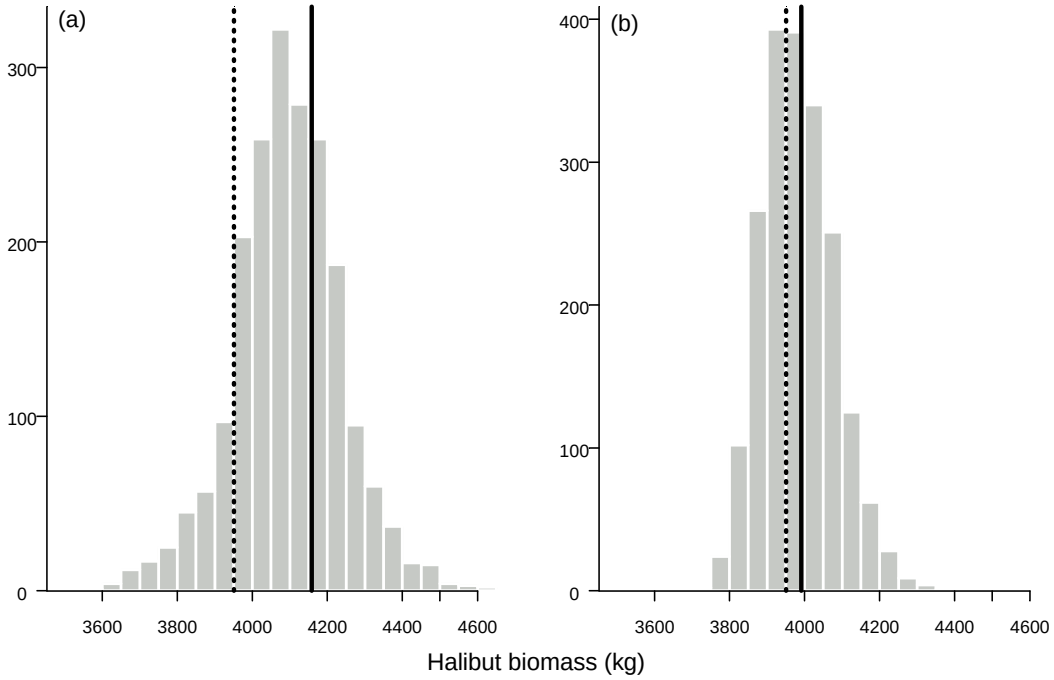

Figure 4. EM-based bootstrap frequency distribution of study total halibut weight (kg) for: (a) EMR1 and (b) EMR2. Census of at-sea discard values are shown by dashed vertical lines; EM point estimates are shown by solid vertical lines.

EM SIMULATIONS

The bootstrap approach used to calculate confidence intervals for the EM-based estimates of halibut discards was extended to examine the question of how reliable the estimates would be if not all halibut in the video record were measured. The sampling regimes examined included measuring every 3rd, every 5th, or every 7th halibut. The approach used was as follows: Let *k* be the frequency for sampling halibut. For each of the 27 hauls, a random number between 1 and *k* was selected. This represents the first fish to measure, and subsequently every k^{th} fish is measured. In cases where there were fewer fish than the first randomly selected one, the first fish was measured.

Errors in fish lengths and in the enumeration of fish in each haul were introduced as for the bootstrap analysis. For each sampling regime, 2000 replicates were generated to represent the sampling distribution.

Decreasing the frequency at which fish lengths are measured has little effect on the average estimate of halibut weight, indicating it does not result in biased estimates (Table 23). The variance of the distribution of weight estimates does increase, with c.v.s increasing from 3.5% to 7.6% for EMR1 and from 2.4% to 6.9% for EMR2 when fish measurements change from every fish to every 7th fish.

Table 23. Mean, standard deviation and c.v. of halibut weight estimates, under alternative frequencies of measuring fish length.

	1		3rd		5th		7th	
	EMR1	EMR2	EMR1	EMR2	EMR1	EMR2	EMR1	EMR2
Mean	4094.3	3984.2	4106.9	3987.7	4093.5	3976.2	4062.5	3969.1
Std. Dev.	144.2	96.7	233.6	191.6	279.6	222.1	307.4	272.6
c.v.	0.035	0.024	0.057	0.048	0.068	0.056	0.076	0.069

DISCUSSION

Results of this pilot study show promise. It is important to point out that the utility of EM for these monitoring applications in a commercial fishery setting may vary according to vessel configuration and level of cooperation by the crew. Success of EM is highly dependent upon camera placements and those available on the *F/V Sea Mac* were ideal. Some vessels may need to make structural modifications for camera placements.

The level of industry cooperation strongly affects the success of an EM-based monitoring program. In this study, cooperation was high and the equipment was attended on all trips by project personnel. In a broader fleet-wide application involving EM, the motivation for EM success may not be as high. An EM system is not tamper proof and crew can interfere with it in various ways such as shutting off the power, disconnecting or diverting certain sensors, interfering with CCTV cameras, etc. While an EM system is

designed to operate autonomously and be tamper evident, a tamper-proof design is likely not practical. The level of cooperation and support for EM-based monitoring should be considered prior to implementation as part of the RPP.

EM MONITORING OF AT-SEA DISCARDS

EM Performance

EM system performed very well in detecting halibut at the pre-discard chute. In this study, the 5cm graduations on the chute worked very well and likely should be adopted in future programs of projects utilizing EM assuming that 5 cm increments meet practical precision requirements for applications of EM on fishing vessels. Based on our pilot study, the placement of the pre-discard chute in relation to cameras appears to be important. Ideally, the chute should be fixed in a specific location so that the camera can be aimed at the chute and immediate surroundings. For our study, the pre-discard chute (which was designed to be a temporary arrangement for purposes of the study and would not be needed for any "real world" application of EM in the RPP) changed position slightly during the course of the project due to weather and vessel motion. This may have affected the accuracy of our EM halibut catch estimates.

The overall accuracy of halibut measurement is influenced by several factors. Firstly, image distortion appears to be inevitable with the telescopic image, resulting in a 'keystone' affect (i.e., the top of the grid was a different dimension than the bottom of the grid). This distortion made it more difficult to calibrate screen measurements of fish, particularly if the chute location changes. Secondly, the speed at which fish were passed across the grid also influenced measurement accuracy. In most cases there were 2-3 frames recorded per fish, which would enable a few opportunities for selecting the best image to measure. A rough estimate of the speed that fish were moving along the chute is about 0.5 meters per second. Increasing the speed of fish movement reduces the number of pictures available while increasing the recording rate provides more pictures at the expense of higher data storage requirements.

The two chute cameras recorded four and six fps for the general and specific views, respectively (See Appendix I). As most measurements were taken from the former camera, a higher frame speed should have been used. The pre-discard chute generally worked well in keeping fish properly aligned with the grid. Infrequent instances where the fish was not aligned with the chute graduation marks or very actively moving resulted in more difficult and less accurate measurements. In most instances halibut were clearly distinguishable on the pre-discard chute although small halibut may not be as easy to identify.

Image quality was assessed as excellent for all but two of the fishing events. In these instances image quality was degraded because of sun glare. Image quality was the same with natural and artificial light (day versus night), cloud cover and precipitation. Vessel motion also has little effect on image quality

since the camera position is fixed relative to the vessel. Rough weather conditions could provide difficulty in making accurate counts of halibut if the rocking motion of the vessel causes fish to slide backward and forward across the measurement chute.

Monitoring Retention of CQ Species

Another aspect of the catch monitoring objectives of our study involved examination of discard activities other than through the pre-discard chute. This was done to ensure that all halibut were discarded via the pre-discard chute and the most practical way to ensure this was to require that all discards occur via the pre-discard chute and that halibut be the only species that could be discarded during the EFP. The analysis of the EM images from camera placements to monitor discard activities other than via the pre-discard chute revealed eight instances involving minor quantities of fish, which were mostly caught in the trawl mesh. These discards occurred as part of net cleaning at the end of fishing trips (prior to returning to port). Net cleaning is a normal part of trawl fishing and discards from such activities is generally not considered discarding. However, for purposes of any future adoption of EM into the RPP, it might be useful to establish guidelines to more precisely distinguish the two activities. In our study, cameras were not trained aft so it was not possible to monitor spillage of fish prior to the net being brought aboard. Net bleeding is likely rare but could occur in cases where the net is overfull or the net has unwanted catch. The importance of including stern monitoring should be considered.

Accuracy and Precision of Estimates

In general, halibut estimates from observer sampling and EM methods are not biased. The observer-based estimates of halibut weight and numbers were not significantly different from the total (at sea discard census plus landings) values. However, the precision of the observer estimates was low, in particular at the haul level. For the observer estimates, the bootstrap distributions of halibut weight and numbers were narrower than the analytical estimates, and are likely more reliable given they do not require adherence to assumptions of normality. For the bootstrap approach, the c.v. of the estimated weight of halibut caught over all trips in the study was 32%.

For the EM method, the null hypotheses of no difference between halibut estimates and at-sea discard census values were not rejected, indicating no bias in the EM method. Differences between EM estimates and total values (at sea discard census plus landings) were significant, but this is expected given the EM method enumerates discards, not total catch. Precision of the EM estimates was high. The bootstrap c.v.s of the weight of halibut discarded over all fishing trips was 3.5% and 2.4% for EM reviewers EMR1 and EMR2, respectively.

Although both the observer and EM methods appear to produce unbiased halibut estimates, precision is much higher for the EM method. The most appropriate comparison of precision for the two methods is the c.v.s from the bootstrap distribution of halibut estimates for the entire study: 32% for the observer method and 3.5% (EMR1) and 2.4% (EMR2) for the EM method. At the haul or fishing event level, the distribution of proportional errors provides a comparison of the relative precision of the two methods.

The fishing event level errors in observer weight estimates ranged from -100% to +1400%, with an average absolute error of 190%. The haul level errors in EM weight estimates ranged from -30% to 43%, with an average absolute error of 6%. These comparisons reflect errors relative to the quantities surveyed by each method; total catch for the observer estimates (Table 18), and at-sea discards for the EM estimates (Table 20),

A simulation was conducted to investigate how uncertainty in EM halibut estimates would increase if only a sub-set of the halibut EM images were measured. Measuring a sub-set of the halibut images could increase the speed of processing the EM data, and hence potentially decrease the associated costs. Measuring every image, the c.v.s of the estimates of halibut discard weight (over all trips) were 3.5% and 2.4% for EMR1 and EMR2, respectively. When every 7th image was measured the c.v.s increased to 7.6% and 6.9% for the two reviewers. The c.v.s describe the expected distribution of errors in the halibut estimates: the halibut estimate would be within $\pm$3.5% of the true weight with every 3rd fish measured and within $\pm$7.6% of the true weight with every 7th fish measured, 65% of the time, given the precision of the EMR1 measurements.

For the EM method a number of covariates were examined to see if they influenced the accuracy of the estimates of halibut discards. Excluding length measurements for images that were unclear or otherwise obstructed did not increase the accuracy or precision in the haul level mean length estimates. Also, there was no apparent difference in the accuracy of fish measurements related to the time of day (ambient light conditions) that the video record was made. The number of fish processed each haul did not influence the accuracy of the EM length measurements, but precision of the measurements appears to have decreased as the quantity of halibut increased.

The EM video images were somewhat distorted so that factors for converting image size to fish length differed between the *top of grid* and *bottom of grid* conversions. Using *bottom of grid* conversions resulted in biased length estimates, while using *top of grid* conversions did not. This could result from the majority of fish lying along the top of the discard chute grid, but this is unknown. Given the difference between *top of grid* and *bottom of grid* conversions was significant, efforts to ensure the video images are not distorted in future EM trials is warranted.

COST CONSIDERATIONS

Pilot projects have limitations in their ability to predict overall costs of using EM in a true fishery application and this EFP, with only one participating vessel, was not suitable or designed for a thorough cost analysis, though approximations can be made. A rigorous assessment of cost comparisons between OS and EM would need to include total and average observer costs charged to the vessel owners per vessel per day over the course of at least one GOA RPP season. This data would have to be provided voluntarily by either the RPP vessel owners and/or the observer provider. EM expenses would include installation and leasing of EM equipment, field services for EM deployments on vessels, transportation of storage data to the appropriate agency and office services for EM data interpretation, analysis and reporting. On some levels of scale, the labor requirements for an EM program may be less

than an observer program. As well, a significant component of EM labor is office-based which would have a much lower unit cost than observers or EM field technicians. If activity levels are high enough to justify EM equipment acquisition and installation costs, EM-based monitoring may be a less costly option.

The six fishing trips in this study required about 20 observer days at sea, for a total of 22-24 days overall while the basic EM labor requirement was about 10 days (excluding EM technician sea time, duplicate viewing, and other special activities). We would expect the EM labor requirement to decline significantly in an operational program as a result of economies of scale and established methodologies. Field service requirements achieve significant economies of scale in terms of effort per sea day with the number of vessels and duration of activity. Office-based data processing activities are less affected by scale but the analysis effort per sea day is already a compelling argument for EM. In this study the 20 days at sea (27 fishing events) resulted in about 35 hours of catch stowage time, the critical activity of monitoring interest. Basic image analysis work required about 21 hours to assess stowage operations, inventory halibut and monitor for discards. Including other time for data handling, quality assessment, sensor data interpretation, the total labor requirement would still be less than 30 hours.

Assuming an average of $350/day for the 10 days of on-site duties, $1100 equipment leasing expense ($1400/month) and $40/hour for the estimated 30 hours of office-based processing, a rough total EM cost estimate for the project days is about $5800. This would compare to an estimated average Kodiak-based observer cost of $500/day: $11,500 for 23 observer days, twice the cost of EM. These approximations could vary significantly per co-op or vessel depending on number of participating vessels, number and duration of RPP trips, technical difficulties, and other unforeseen factors.

The historic 'Olympic style' Kodiak rockfish fishery was intense in nature with several vessels actively fishing over a short duration. In this instance EM would have been more practical than observers because fewer people were needed to service the fleet and the level of activity was high making it easier to justify the EM field service infrastructure. Under a rationalized fishery such as the RPP, fewer vessels fishing are expected but their fishing activity will extend over a longer time period. Fleet monitoring for this style of fishery would be simpler for both EM and observer monitoring but the low activity may make it harder to provide EM field services. The specific fishery context needs to be more fully examined in order to better assess the viability of EM.

LOOKING AT LARGER SCALE EM APPLICATIONS FOR THE RPP: PHASE II

The results of this (Phase I) electronic monitoring study clearly show that estimating quantities of at-sea halibut discards in the Kodiak-based rockfish fishery through video records is not only feasible but likely to be sufficiently accurate and precise for management's needs when compared to estimates obtained from the current observer sampling methods. Though not statistically different from the actual totals at the haul, trip (with the exception of trip 5) or project level (based on parametric tests), but highly imprecise when estimates could be compared (Table 18), a cursory examination of the data clearly show that observer estimates of halibut weights and numbers by trip differ widely from the actual at-sea

discard census plus landings data (Table 24). Over the course of this EFP, observer sampling underestimated the actual overall halibut weight by 43% and underestimated the actual halibut numbers by 53%. For quality of data, EM appears to be the preferred option, even when only every 7th halibut is measured.

Table 24. Actual halibut weights and numbers vs observer estimates by trip.

Trip	Actual		Observer estimate	
	Kg.	No.	Kg.	No.
1	580.4	82	0	0
2	521.8	83	821.8	113.4
3	94.1	18	935.3	144.6
4	959.2	217	216.1	27.3
5	815.4	137	238.1	64.4
6	1298.5	288	205.5	38.2
Combined	4269.4	825	2416.7	388

We stress, however, that this experiment used only one vessel specifically chosen for its suitability to achieve the EFP's objectives. At 90' with a 33' beam, the *Sea Mac* was an ideal vessel for the required sampling layout which necessitated extra space for a halibut holding area between the end of the pre-discard chute and the normal discard scupper (a large tote in this case). The large vessel size and the high level of skipper and crew cooperation facilitated basket sampling, codend measurements and thorough sorting of halibut from the catch (with the possible exception of Haul 1 – see table 26). The crew consistently discarded only halibut (with the minor exception of a few rockfish laying on deck or picked from the net) and only via the pre-discard chute, as instructed, at a reasonable rate. The stringent EFP applicant requirements and the presence of 3 or 4 project personnel on board at all times also helped to ensure compliance and cooperation.

For application of EM at the fleet or co-op level the vessels electing to participate would need to provide full cooperation, and this might involve making some concessions in order to make the program work for the RPP. This could include: (1) installation of a secure, stationary and well-marked discard chute of suitable size; (2) limiting all at-sea discards to this single point of discard; (3) handling halibut in a manner that would facilitate the subsequent video review. This would mean that halibut should be discarded singly and in a unidirectional, tidy manner (instead of being flipped or rotated while discarding). This would also entail discarding halibut at a reasonable pace. Finally, it's likely that vessels would need to make structural adjustments for camera installation, but, again, this study only evaluated EM on a single vessel and future work to develop EM for the RPP will be better positioned to evaluate the extent to which different vessels will require different degrees of modifications.

Phase II, which is currently under development by NMFS Alaska Region and AFSC staff as an extension of this current cooperative research EFP project, will involve all of the vessels in one RPP co-op (3-5 vessels) during normal fishing operations over the course of the 2008 season. Phase II will focus on electronic

monitoring as a management tool and how to incorporate the EM data from all participating vessels into the system in a timely manner so as to monitor and manage the PSC in the CGOA rockfish fishery effectively and efficiently while dealing with the realities of the fishing and processing environments. Also to be addressed is the issue of halibut inevitably missed by the sorters at sea and delivered to the processing plant (Table 25). These data also need to be sent to NMFS/Juneau and, combined with the EM data, incorporated into the agency's catch accounting system.

Table 25. Number of halibut sorted at sea and delivered to the plant by trip.

Trip	Sorted	Delivered	Total
1	52	30	82
2	76	7	83
3	18	0	18
4	214	3	217
5	133	4	137
6	282	6	288
Totals:	775	50	825

Phase II is also expected to address the variability among vessels in a co-op and how this variability could influence or affect the feasibility and/or accuracy of using EM to estimate quantities of at-sea halibut discards at the haul, trip and co-op levels. Variables would include vessel size, deck layout, crew compliance and cooperation, the crew's ability to sort halibut out of the catch, design and placement of the discard chute, camera installation points, image quality, halibut bycatch rate and manner of discard.

A more thorough analysis which evaluates the tradeoffs between quality, cost and timeliness is also anticipated to be a primary objective of Phase II. Issues expected to be addressed include EM vs. 100% observer costs; timeliness of data availability; differences and variability of the time and video monitoring costs among the vessels in the co-op. Potentially useful would be a breakdown of time and costs by categories such as installation, leasing, technical support, transportation of data, video processing and review. What tradeoffs in time, cost and data quality are acceptable from both agency and industry perspectives? Also, what percentage of the RPP trawlers is amenable to EM and how many would elect to pay for EM vs. observer given a range of cost scenarios?

Acknowledgements:

John Gauvin, Gauvin and Associates, LLC

Bill Karp, NMFS/AFSC

Martin Loefflad, NMFS/AFSC

Jennifer Watson, NMFS/Alaska Region

Jennifer Cahalan, Pacific States Marine Fisheries Commission/NPGOP

Archipelago Marine Research, Ltd

Dr. Vivian Haist

Rich Wawrzonek, AFSC/NPGOP

Jennifer Ferdinand, AFSC/NPGOP

Rob Swanson, AFSC/NPGOP

Alan Kinsolving, NMFS/Alaska Region

Skipper and crew of the F/V *Sea Mac*

Alaska Pacific Seafoods

WORKS CITED

Cochran, W. G. 1977. Sampling techniques. 3rd edition. John Wiley & Sons. New York. 428 p.

Efron, B, and R.J. Tibshirani. 1998. An introduction to the bootstrap. Chapman & Hall. New York. 436 p.

Haist, V. 2008. Alaska Groundfish Data Bank study to evaluate an electric monitoring program for estimating halibut discards: Statistical analysis of study data. Unpublished report prepared for Marine Conservation Alliance Foundation, Juneau, AK. 28 pp.

McElderry, H., R. Reidy, J. Illingworth, M. Buckley. 2005. Electronic Monitoring of the Kodiak, Alaska Rockfish Fishery, a Pilot Study. Unpublished report prepared for the National Marine Fisheries Service by Archipelago Marine Research Ltd., Victoria, BC and Digital Observer, Inc., Kodiak, AK. 43 pp.

McElderry, H., J. Schraeder, T. Wallin, S. Oh. 2008. Trials on F/V *Sea Mac* To Evaluate the Use of Electronic Monitoring for the Kodiak, AK Rockfish Pilot Program. Unpublished report prepared for Marine Conservation Alliance Foundation, Juneau, AK. 17 pp.

APPENDIX I – EM System Description

Overview of the EM System

The EM system supplied by Archipelago for this project was operated on the ship's power to record imagery and sensor data during each fishing trip. The software was set to automatically activate image recording based on preset sensor indicators (e.g. winch activity). The EM system was configured to automatically restart and resume program functions following power interruption. EM system components are described in the following sections.

Archipelago's EM system is shown schematically below and consists of the following components:

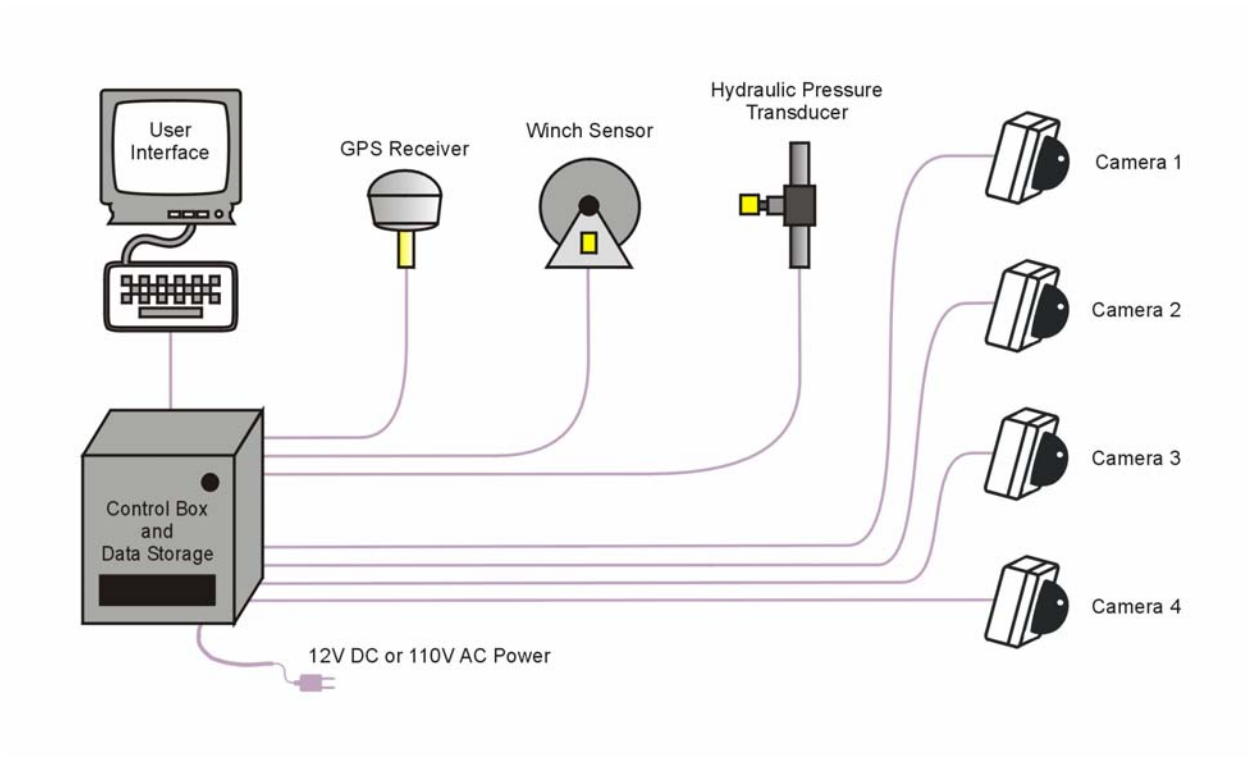

Control Box

The heart of the electronic monitoring system is a metal tamper-resistant control box (approx. 15x10x8" = 0.7 cubic feet) that houses computer circuitry and data storage devices (Fig. A1). The control box receives inputs from several sensors and up to four CCTV cameras. The control box is generally mounted in the vessel cabin and powered with either DC or AC electrical power. In the case of AC power, the control box may be also fitted with a UPS, to ensure continuous power supply. The user interface provides live images of camera views as well as other information such as sensor data and EM

system operational status (Fig. A1). The interface has been designed to enable vessel personnel to monitor system performance.

EM systems use high capacity video hard drives for storage of video imagery and sensor data. The locked drive tray is removable for ease in replacement. Depending upon the number of cameras, data recording rates, image compression, etc., data storage can range from a few weeks to several months. The four camera set up in this study (combined total of 14fps) and a 500-gigabyte hard drive would provide continuous recording for about 63 days.

Figure A1. EM control box and user interface installation.

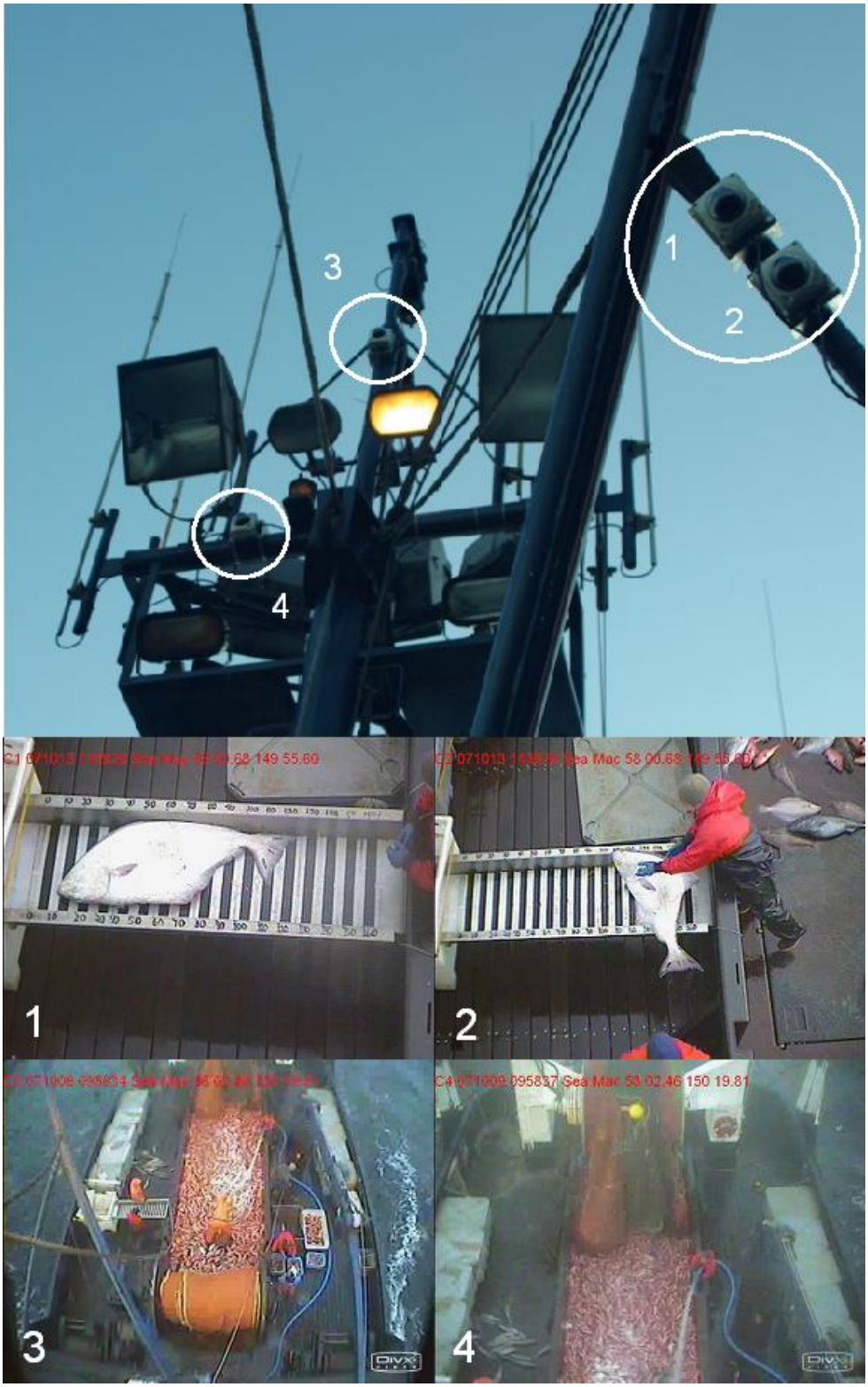

Figure A2. The four CCTV camera installations aboard the F/V *Sea Mac*. Each camera has a mounting bracket and stainless steel mounting straps.

CCTV Cameras

Waterproof armored dome cameras were used as they have been proven reliable in extreme environmental conditions on long-term deployments on fishing vessels. The camera is lightweight, compact and quickly attaches to the vessel's standing structure with a universal stainless steel mount and band straps. In general, three or four cameras were used to cover general fish and net handling activity and areas around the vessel.

Four color cameras with 480 TV lines of resolution and low light capability (1.0 lux @ F2.0) were used in this application (Fig. A2). A choice of lenses is available to achieve the desired field of view and image resolution. The cameras have an electronic iris that adjusts automatically to reduce the effects of glare or low light levels on image quality. The output signal is composite video (NTSC) delivered by coaxial cable to the control box and converted to a digital image (480 x 640 pixel resolution). Electrical power (12 volt DC) is carried to the camera on conductors packaged in a single sheath with the coaxial cable.

GPS Receiver

An independent Garmin 17N GPS receiver is installed with the EM system. The GPS receiver and antenna are integrated into a single plastic dome that is wired directly to the control box, there is no attached display interface. The GPS receiver is fixed to mount on top of the wheelhouse away from other antennae and radars (Figure A3).

The Garmin GPS receiver is a 12 channel parallel receiver, meaning it can track up to 12 GPS satellites at once while using 4 satellites that have the best spatial geometry to develop the highest quality positional fix. The factory stated error for this GPS is less than 15 meters (Root Mean Square). This means that if the receiver is placed on a point with precisely known coordinates, a geodetic survey monument for example, 95% of its positional fixes will fall inside a circle of 15 meters radius centered on that point.

The GPS time code delivered with the Garmin positional data is accurate to within 2 seconds of the Universal Time Code (UTC = GMT). The EM control box software uses the GPS time to chronologically stamp data records and to update and correct the real time clock on the data-logging computer.

When 12 volts DC is applied the GPS delivers a digital data stream to the data-logging computer that provides an accurate time base as well as vessel position, speed, heading and positional error. Speed is recorded in nautical miles per hour (knots) to one decimal place and heading to the nearest degree.

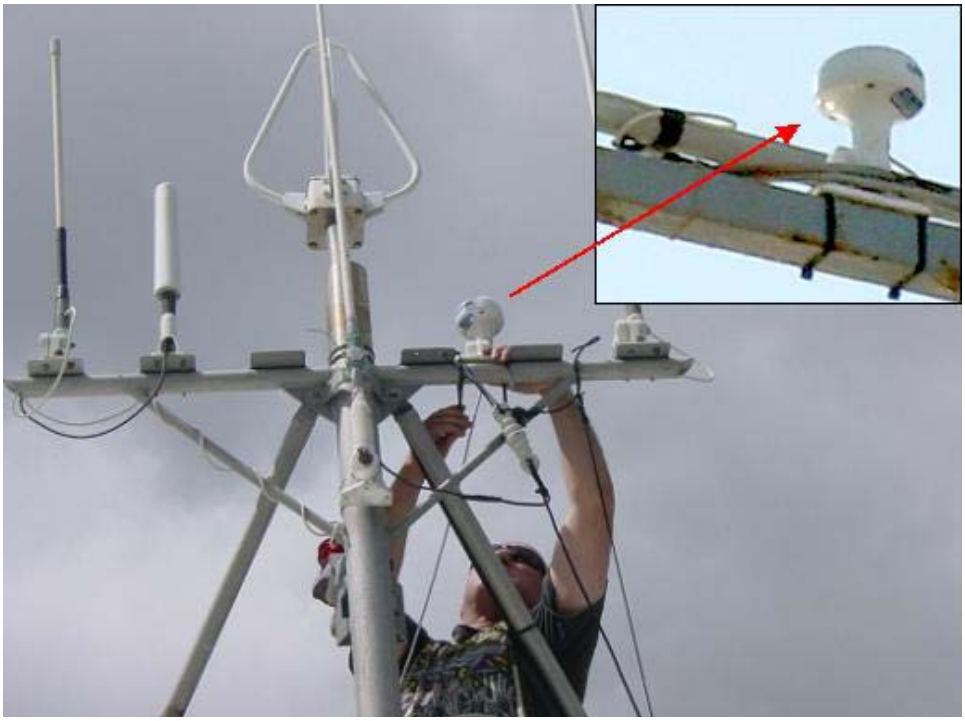

Figure A3. GPS receiver installed in the rigging of a vessel and a close up photograph of the mounted GPS.

Hydraulic Pressure Transducer

An electronic pressure transducer was attached to the hydraulic system (Figure A4) of each vessel to provide a record of fishing activity. The sensor has a 0 to 2500 psi range, high enough for most vessel hydraulic systems, and a 15,000 psi burst rating. The sensor is fitted into a ¼ inch pipe thread gauge port or tee fitting on the pressure side of the hauler circuit. An increase in system pressure signals the start of fishing operations such as longline retrieval. When pressure readings exceed a threshold that is established during system tests at dockside, the control box software turns the digital video recorder on to initiate video data collection.

Figure A4 Hydraulic pressure transducer installed at trawl warp winch.

Drum Rotation Sensor

A photoelectric drum rotation sensor is usually mounted on either the warp winch or net drum of each vessel (Figure A5). The small waterproof sensor is aimed at a prismatic reflector mounted to the winch drum to record winch activity and act as a secondary video trigger.

Figure A5. Drum rotation sensor mounted on trawl warp winch, showing optical sensor and reflective surface.