FINAL REPORT

Port of Alaska Modernization Program Petroleum and Cement Terminal Project: Acoustic Monitoring Plan

Prepared for

Port of Alaska

2000 Anchorage Port Road
Anchorage, Alaska 99501

March 04, 2020

List of Preparers

Suzann Speckman, PhD: HDR Alaska Marine Science Program Lead

Heather Spore: HDR Marine Biologist

James Reyff: Illingworth & Rodkin Senior Consultant

Paul Donavan: Illingworth & Rodkin Senior Consultant

Leslie Curran: HDR Marine Biologist

Brett Carrothers: HDR Wildlife Biologist

Recommended Citation:

Port of Alaska. 2019. Port of Alaska Modernization Program, Petroleum and Cement Terminal Project: Sound Source Verification Study. Prepared by HDR, Inc., Anchorage, AK; and Illingworth & Rodkin, Petaluma, CA; for the Port of Alaska under contract to CH2M.

Contents

Section Page

Acronyms and Abbreviations iii

1 Introduction and Purpose 5
1.1 PCT Project Location and Physical Environment 5
1.2 PCT Project Description 6
1.2.1 Permanent Construction 6
1.2.2 Temporary Construction 7
1.3 Noise Mitigation: Air Bubble Curtain 11
1.3.1 Temporary Piles 11
1.3.2 Permanent Piles 12
1.4 Hearing Abilities of Marine Mammals 14
1.5 Underwater Sound Thresholds for Marine Mammals 15

2 PCT Sound Source Verification Study Objectives 17

3 Monitoring Plan Methodology 19
3.1 Roles and Responsibilities 19
3.2 Sound Pressure Levels 19
3.2.1 Data Collection 19
3.2.2 Data Analysis 21
3.3 Transmission loss 21
3.4 Other Sources of Noise 21

4 Contractor Requirements 23
4.1 Data Collection 23
4.1.1 Data Form 23
4.1.2 Reporting 23
4.2 Quality Control and Quality Assurance 24
4.3 Reporting 24
4.3.1 For Each Measurement Day 24
4.3.2 Data Processing and Final Report 24

5 Literature Cited 27

Tables

Table 1-1. Generalized Hearing Ranges for Functional Marine Mammal Hearing Groups and Port of Alaska Species 15
Table 1-2. Summary of PTS Onset Acoustic Thresholds for Assessing Level A Harassment, and Acoustic Criteria for Assessing Level B Harassment, of Marine Mammals from Exposure to Noise from Impulsive (Pulsed) and Non-impulsive Underwater Sound Sources 16

Figures

Figure 1-1. Location of the PCT Project in Knik Arm 8
Figure 1-2. Project Footprint and Pile Locations for the Proposed PCT 9
Figure 1-3. Stylized Illustration of a Typical Temporary Construction Work Trestle 10
Figure 1-4. Stylized Illustration of a Typical Dolphin Pile Template 10
Figure 1-5. Diagram of Temporary Pile and Confinement System, Demonstrating Concentric Arrangement that can be Lifted and Dropped onto the Seafloor Together 12
Figure 1-6. Template Configuration used for Installation of Confined Casing System used for Permanent Piles 13
Figure 1-7. Diagram of Permanent Pile and Confinement System, Showing Arrangement Requiring Vibratory Installation of Confinement and Separate Advancement of Pile 14

Acronyms and Abbreviations

dB	decibel(s)
HF	high frequency
Hz	Hertz
IHA	Incidental Harassment Authorization
kHz	kilohertz
LF	low frequency
µPa	microPascals
MF	medium frequency
MMPA	Marine Mammal Protection Act
NMFS	National Marine Fisheries Service
OW	otariid in water
PAMP	Port of Alaska Modernization Program
PCT	Petroleum and Cement Terminal
POA	Port of Alaska
PTS	permanent threshold shift
PW	phocid in water
rms	root mean square
SEL	Sound Exposure Level
SPL	Sound Pressure Level
TL	Transmission Loss
TPP	Test Pile Program
USACE	U.S. Army Corps of Engineers

This page intentionally left blank.

1 Introduction and Purpose

The Port of Alaska (POA) is modernizing its facilities through the Port of Alaska Modernization Program (PAMP). Located within the Municipality of Anchorage on Knik Arm in upper Cook Inlet, the existing infrastructure and support facilities were constructed largely in the 1960s. They are substantially past their design life, have degraded to levels of marginal safety, and are in many cases functionally obsolete, especially in regard to seismic design criteria and condition. The PAMP will include construction of new pile-supported wharves and trestles, with a planned design life of 75 years.

The Petroleum and Cement Terminal (PCT) Project, a component of the PAMP, is a new construction project intended to replace the existing Petroleum Oil Lubricants Terminal with a new structure that exceeds current seismic standards. The project will occur over two construction seasons, or in two phases. The POA is planning to complete Phase 1 construction of the PCT Project between approximately 01 April 2020 and 30 November 2020. In consideration of potential project delays, however, a Marine Mammal Protection Act (MMPA) Incidental Harassment Authorization (IHA) was requested from the National Marine Fisheries Service (NMFS) for the 1-year period from 01 April 2020 to 31 March 2021 for Phase 1. A second construction season for Phase 2 will occur from approximately 01 April 2021 to 31 March 2022.

The PCT will be a new pile-supported structure located along the southern shoreline of the POA (Figure 1-1). The PCT Project will involve construction of the terminal platform, access trestle, and mooring and breasting dolphins; and installation of utility (electricity, water, and communication), petroleum, and cement lines linking the terminal and shore (Figure 1-2). The current PCT design includes both an access trestle (bridge-like structure allowing access to the loading platform) and a temporary construction work trestle. Following construction of the access trestle, the temporary construction work trestle piles will be removed.

This document provides the framework for the Draft Acoustic Monitoring Plan (Monitoring Plan) to be implemented during the PCT Project. The criteria presented here will be used by the hydroacoustic monitoring team to develop the detailed means and methods that will be employed during the Monitoring Plan. Data collection and analysis methods for the Monitoring Plan will be consistent with NMFS guidance on hydroacoustic monitoring for near-source measurements.

In this document, units of measure reported for construction activities are U.S. customary units, which are typically used in construction. Units of measure for scientific information, including acoustics, are metric. When appropriate, units are reported as both U.S. customary and metric. Sound levels are described in decibels (dB), referenced to 1 microPascal (re 1µPa) for peak and root-mean-square (rms) Sound Pressure Levels (SPLs) and re 1µPa^2-sec for Sound Exposure Levels (SELs).

1.1 PCT Project Location and Physical Environment

Cook Inlet is a large tidal estuary that exchanges waters at its mouth with the Gulf of Alaska. Freshwater input to Cook Inlet comes from snowmelt and rivers, many of which are glacially fed and carry high sediment loads. The POA is located in the lower reaches of Knik Arm, in upper Cook Inlet, along the industrial waterfront of Anchorage, just south of Cairn Point and north of Ship Creek (Figure 1-1; Latitude 61° 15’ N, Longitude 149° 52’ W; Seward Meridian). Knik Arm and Turnagain Arm are the two branches of upper Cook Inlet, and Anchorage is located where the two branches join.

Knik Arm extends about 48 kilometers (30 miles) in a north-northeasterly direction to the mouths of the Matanuska and Knik rivers. At Cairn Point, just northeast of the POA, Knik Arm narrows to about 2.4 kilometers (1.5 miles) before widening to as much as 8 kilometers (5 miles) at the tidal flats northwest of Eagle Bay at the mouth of Eagle River. The perpendicular distance to the west bank directly across Knik

Arm from the POA is approximately 4.2 kilometers (2.6 miles). The distance from the POA (east side) to nearby Port MacKenzie (west side) is approximately 4.9 kilometers (3 miles).

Knik Arm comprises narrow channels flanked by large tidal flats that consist of fine, silt-sized glacial flour, sand, mud, and gravel. Approximately 60 percent of Knik Arm is exposed at Mean Lower Low Water. Surface waters in Knik Arm typically carry high silt and sediment loads, particularly during summer, making it an extremely silty, turbid waterbody with low visibility throughout the water column. The Matanuska and Knik rivers contribute the majority of fresh water and suspended sediment into the Knik Arm during summer. Smaller rivers and creeks also enter along the sides of Knik Arm (USDOT and POA 2008).

Tides in Cook Inlet are semi-diurnal, with two unequal high and low tides per tidal day (tidal day = 24 hours, 50 minutes). Due to Knik Arm's predominantly shallow depths and narrow widths, tides near Anchorage are greater than those in the main body of Cook Inlet. The tides at the POA have a mean range of 7.99 meters (26.2 feet), and the maximum water level has been measured at more than 12.5 meters (41 feet) at the Anchorage station (NOAA 2015). Maximum current speeds in Knik Arm, observed during spring ebb tide, exceed 7 knots (12 feet per second). These tides result in strong currents in alternating directions through Knik Arm and a well-mixed water column. The navigation harbor at the POA is a dredged basin in the natural tidal flat. Natural sedimentation processes act to continuously infill the dredged basin throughout the year.

The POA is an active industrial port that is traversed by barges, tug boats, military vessels, and commercial vessels, including container ships, cruise ships, and tenders. The POA's shipping lanes and berths are subject to dredging in order to support port operations. These ongoing uses and activities contribute to elevated background levels of noise in and near the POA. In addition, upper Cook Inlet has some of the highest tides in the world (NOAA 2015), which create strong bidirectional currents and contribute to high ambient underwater sound levels. A number of hydroacoustic studies have measured ambient (background) noise levels in and near the POA that are variable and high (Blackwell 2005; URS 2007; SFS 2009; HDR 2011; Austin et al. 2016).

1.2 PCT Project Description

1.2.1 Permanent Construction

The PCT terminal platform will be supported by approximately 45 round, 48-inch-diameter steel pipe piles and will have a surface area of 15,300 square feet. The platform will connect to the shore by the access trestle, which will be supported by 26 round, 48-inch-diameter steel pipe piles and have a surface area of 11,254 square feet. Six mooring dolphins and three breasting dolphins will each consist of a single round, 144-inch-diameter steel pipe pile. The mooring dolphins will be constructed parallel to and landward of the loading platform face, and the breasting dolphins will be constructed parallel with the PCT loading platform face (Figure 1-2). Catwalks will be installed above the water to connect the dolphins and loading platform. The access trestle is comprised of eight bents (clusters) of three piles each and one bent of two piles at the abutment (Figure 1-2).

An APE D180 diesel impact hammer or equivalent will likely be used to install the 48-inch piles. A Menck 800S hydraulic impact hammer or equivalent will likely be used to install the 144-inch monopile dolphins. An APE 600 or similar vibratory hammer may be used, if necessary, on approximately 10 percent (estimate) of the 48- and 144-inch piles for safety reasons or if a pile encounters an obstruction, and extraction or adjustment is required. It is anticipated that multiple hammers, both vibratory and impact, will be present at the construction site and available for use. On some days, use of two hammers could occur: two vibratory hammers, two impact hammers, or one of each. Use of two hammers within 1 day will increase the production rate on those days, thereby reducing the number of days of work required to complete the project and reducing the overall duration of project construction. Vibratory

hammer methods may be used to install loading platform and trestle piles if necessary for safety reasons or if a pile encounters an obstruction.

1.2.2 Temporary Construction

A temporary construction work trestle is anticipated to be necessary to support construction of the access trestle during Phase 1 and will be located adjacent, parallel to, and north of the access trestle (Figure 1-3). A driving template inclusive of temporary piles will be required for construction of each of the nine bents of the access trestle. This template will also be used for a welding platform during splicing operations. Temporary construction piles will be needed during Phase 2 to anchor the template that will guide the installation of 144-inch piles at each of the nine dolphin locations (Figure 1-4). Temporary piles are required to be installed using a vibratory hammer due to specific construction and accuracy requirements, sequencing, and schedule.

See Section 1 of the *Port of Alaska Modernization Program Petroleum and Cement Terminal Project: Application for a Marine Mammal Protection Act Incidental Harassment Authorization* (IHA Application; POA 2019) for a detailed description of the PCT Project.

Figure 1-1. Location of the PCT Project in Knik Arm

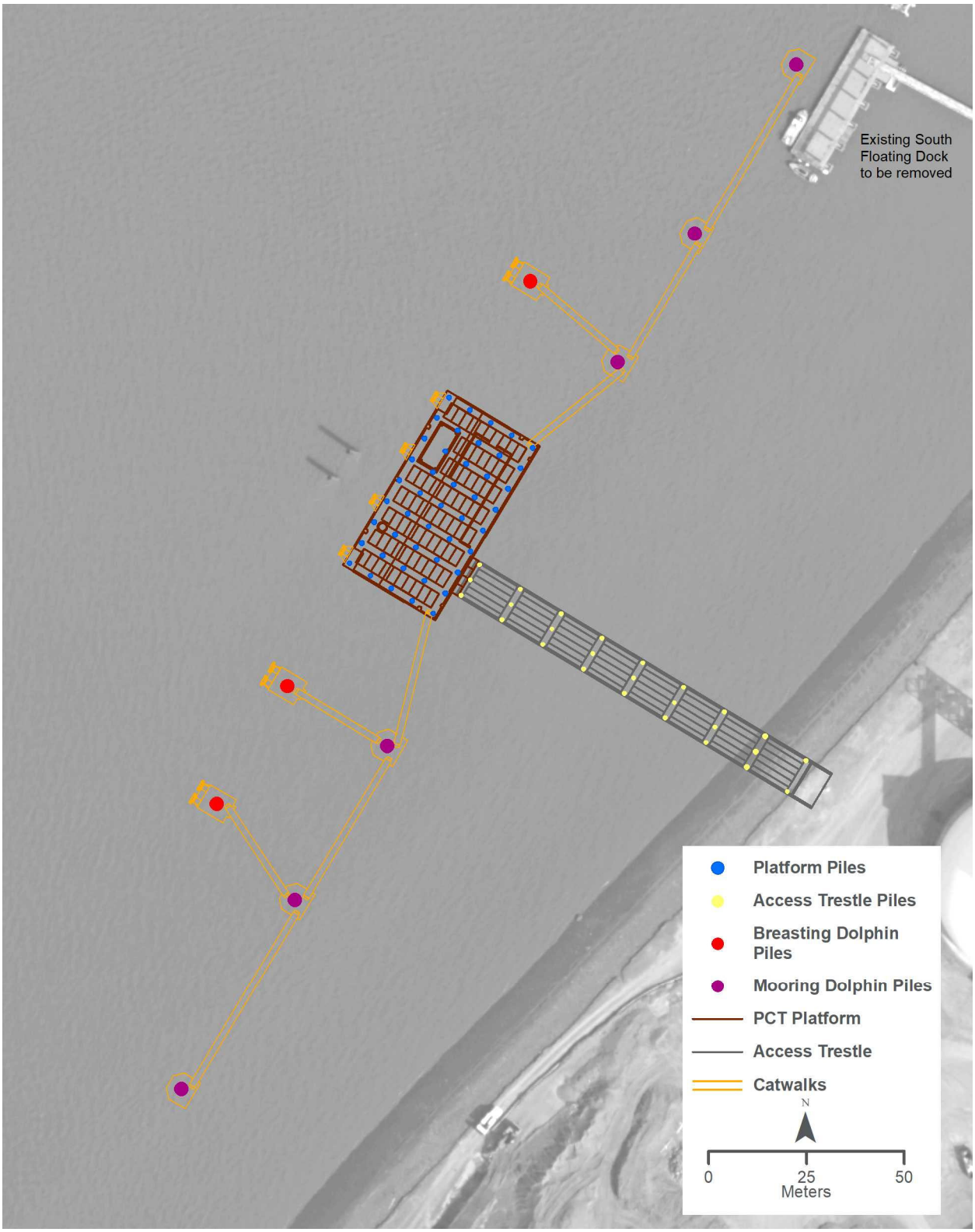

Figure 1-2. Project Footprint and Pile Locations for the Proposed PCT

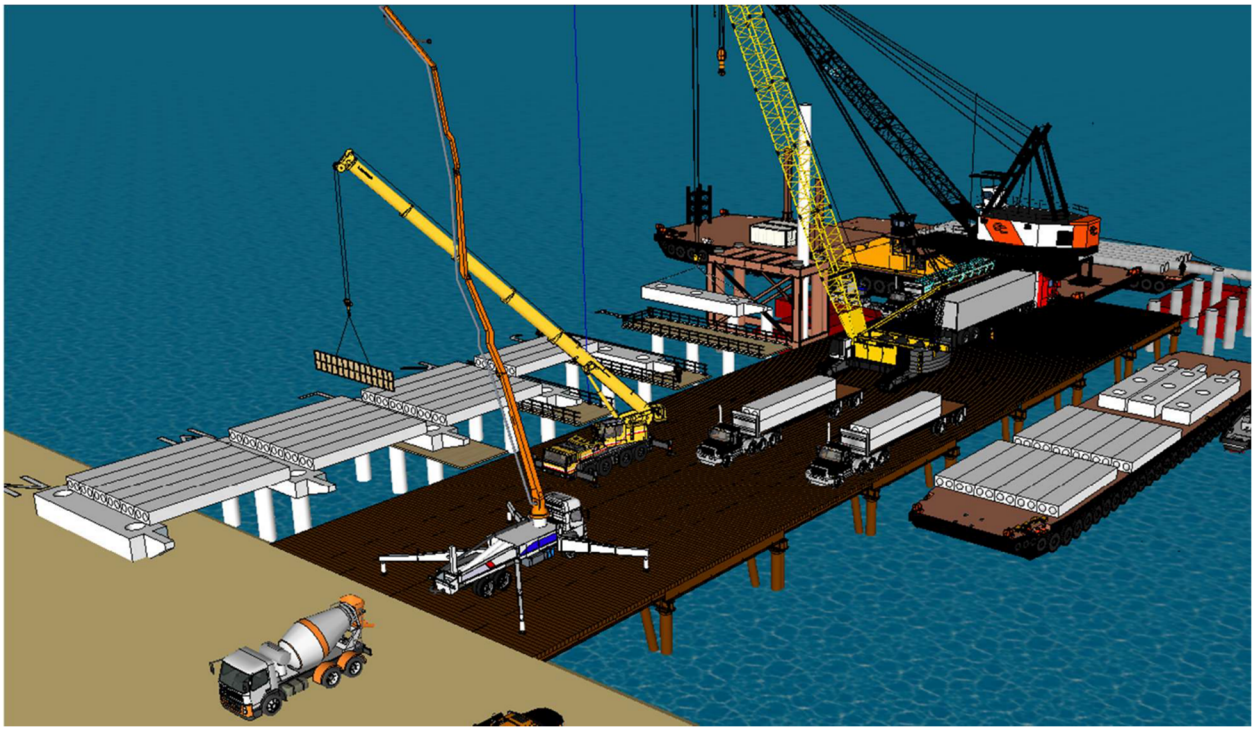

Figure 1-3. Stylized Illustration of a Typical Temporary Construction Work Trestle

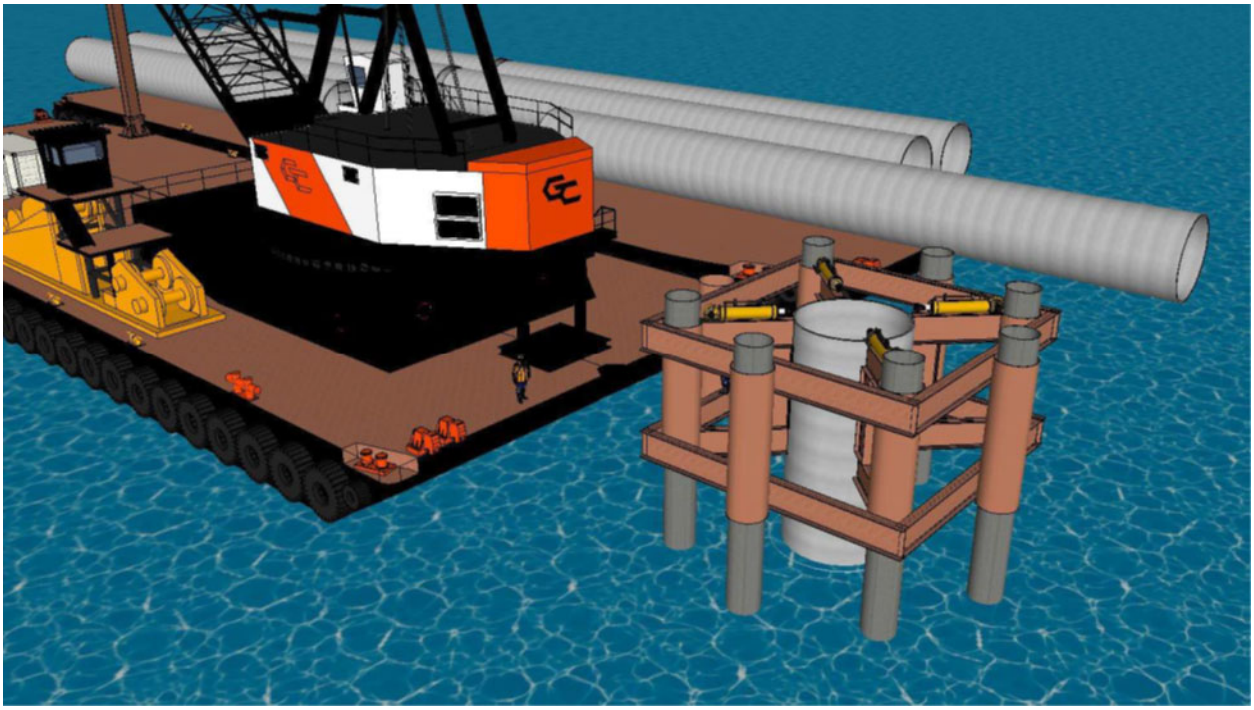

Figure 1-4. Stylized Illustration of a Typical Dolphin Pile Template

1.3 Noise Mitigation: Air Bubble Curtain

The use of an air bubble curtain system as a noise mitigation method is planned for the PCT. A confined air bubble curtain system (bubble curtain) was tested during the 2016 Test Pile Program (TPP; POA 2016) and was found to be an effective method of reducing in-water SPLs from impact and vibratory installation of 48-inch vertical steel pipe piles (see Section 6.3.2 of the IHA Application [POA 2019]).

The bubble curtain will be used during PCT construction for impact and vibratory hammer pile installation on all temporary and permanent vertical piles. A bubble curtain will not be deployed during installation and removal of battered (installed at an angle, not vertical) piles due to the difficult geometric application. The effectiveness of a bubble curtain on battered piles is limited because the angle of the battered pile prevents the bubbles from being distributed evenly around the pile surface.

During Phase 1, for temporary and permanent piles installed or removed in locations where water depth is greater than 3 meters, the POA will use a confined bubble curtain to attenuate in-water noise resulting from use of impact and vibratory pile hammers. During Phase 2, an unconfined bubble curtain system will be required on the 144-inch monopile dolphins due to their large size. The specific bubble curtain system to be applied during Phase 2 for temporary piles will be guided by the construction contractor's Work Plan once that contract is awarded (currently scheduled for third quarter of 2020) and performance results from the Phase 1 bubble curtain system.

The bubble curtain air flows and annular space will conform to the guidance outlined in Section 11 of the POA's draft IHA application dated 15 October 2019, and to applicable portions of NMFS and U.S. Fish and Wildlife Service, Washington Fish and Wildlife Office document dated 31 October 2006 titled *Impact Pile Driving Sound Attenuation Specification*.

Figures included in the text below were excerpted from Pacific Pile and Marine's *Design Drawings and Performance Data Rev. B* submittal to the POA, dated 23 January 2020.

1.3.1 Temporary Piles

Attenuation for temporary piles during Phase 1 will conform to the following:

- Twenty-four-inch-diameter temporary piles will have a 48-inch-diameter confinement casing. Thirty-six-inch-diameter temporary piles will have a 60-inch-diameter confinement casing.
- Temporary piles and confinement casing, with installed bubble curtain hardware, will be lofted together in a concentric arrangement and allowed to drop onto the seafloor. The weight of the configuration will embed the arrangement into the seafloor at an estimated shallow depth. There will be an arrangement of spacers that center the pile within the confinement casing. These spacers will be padded with a layer of padding material to prevent metal-to-metal contact between the confinement casing and the pile. The amount of self-weight penetration into sediment is somewhat variable, but is expected to be several feet. The lowest bubble ring will be as close to the seafloor as possible, and the construction contractor will need to perform adaptive management measures based on actual field conditions in consideration of the self-penetration application. Figure 1-5 illustrates this concentric arrangement.
- Once the bubble curtain is operational, the temporary pile will be driven with a combination of vibratory and impact methods within the confinement casing; after pile driving, the confinement casing will be lifted off of the temporary pile. For removal of temporary piles, the confinement casing, with installed bubble curtain, will be re-deployed over the pile. Once the bubble curtain is operational, the temporary pile will be extracted using vibratory methods within the confinement casing, and the temporary pile casing will be removed (lifted off) together with the temporary pile.

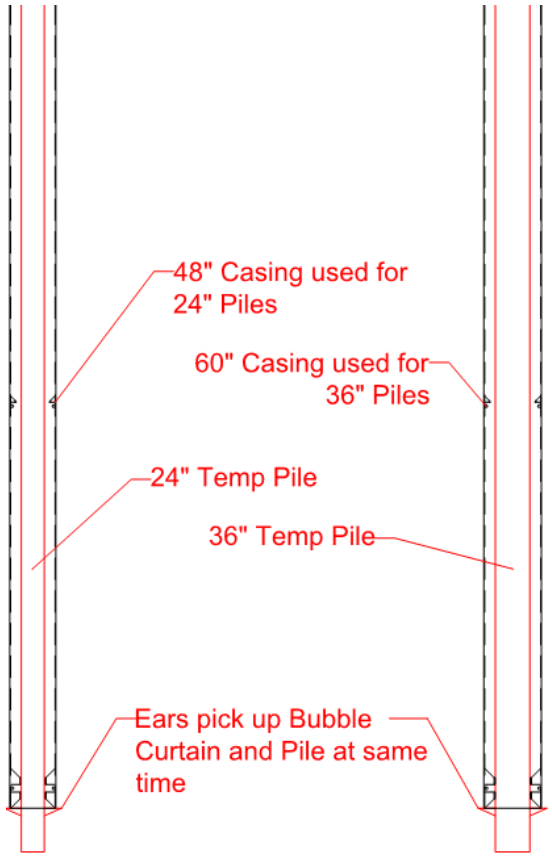

Figure 1-5. Diagram of Temporary Pile and Confinement System, Demonstrating Concentric Arrangement that can be Lifted and Dropped onto the Seafloor Together

1.3.2 Permanent Piles

Attenuation for permanent piles during Phase 1 will conform to the following:

- The permanent piles are heavier and longer than the temporary piles; therefore, the method of lofting a permanent pile and concentric confinement casing together is not feasible. The 2020 program includes 71 48-inch-diameter permanent piles, each of which will be fitted with a 72-inch-diameter confinement casing.
- Confinement casing with installed bubble curtain hardware will be lofted through a template, shown in Figure 1-6, to the sea floor and then will be driven to a nominal depth of 10 to 15 feet using vibratory methods. Vibratory hammer use is planned for no more than 3 minutes per confinement casing, with a total project impact of 215 minutes, which is less than 4 hours total project impact during the Phase 1 construction season. This will be a very short duration of generation of unattenuated vibratory sound for each of the 71 permanent piles. Use of a vibratory hammer is necessary in order to stabilize the pile using the sea floor embedment and the template, so that the confinement casing can be released from the crane without endangering personnel or property. Once the confinement casing is in place, the permanent pile will be lofted through the casing and allowed to self-weight into the sea floor. The bubble curtain will be activated and then the permanent pile will be driven using impact methods (or vibratory method in case of pile-driving difficulties, safety, constructability issues, or obstructions, as discussed elsewhere in the work description). After driving to depth, the confinement casing will be lifted off of the pile. This will not require vibratory energy because of the shallow embedment. Figure 1-7 illustrates the arrangement for installation of the permanent piles and confinement system.

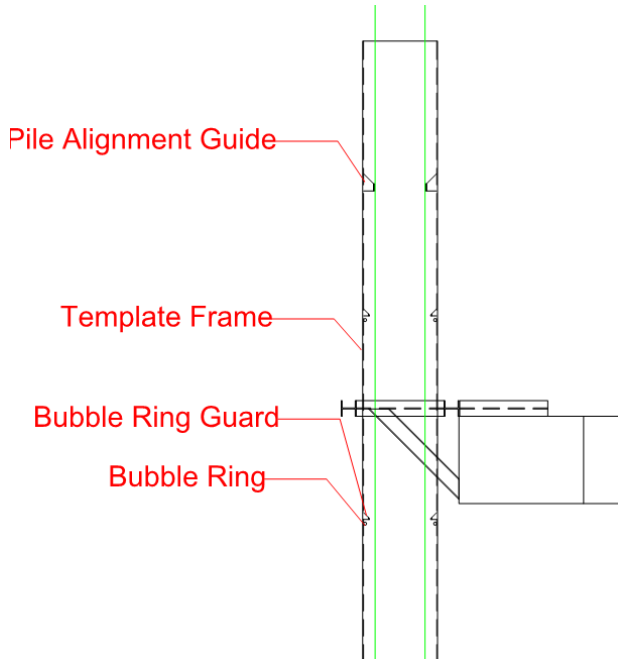

Figure 1-6. Template Configuration used for Installation of Confined Casing System used for Permanent Piles

- A certain number of the permanent piles will require a short duration re-strike pile-driving event to prove pile axial capacity. This is planned for up to seven events. For these events, the confinement casing will be lowered over the permanent pile and allowed to self-weight into the sea floor sediments; the bubble curtain will be activated and then the pile re-struck with the impact hammer. Once the axial capacity is determined, the confinement casing will be lifted off of the permanent pile.

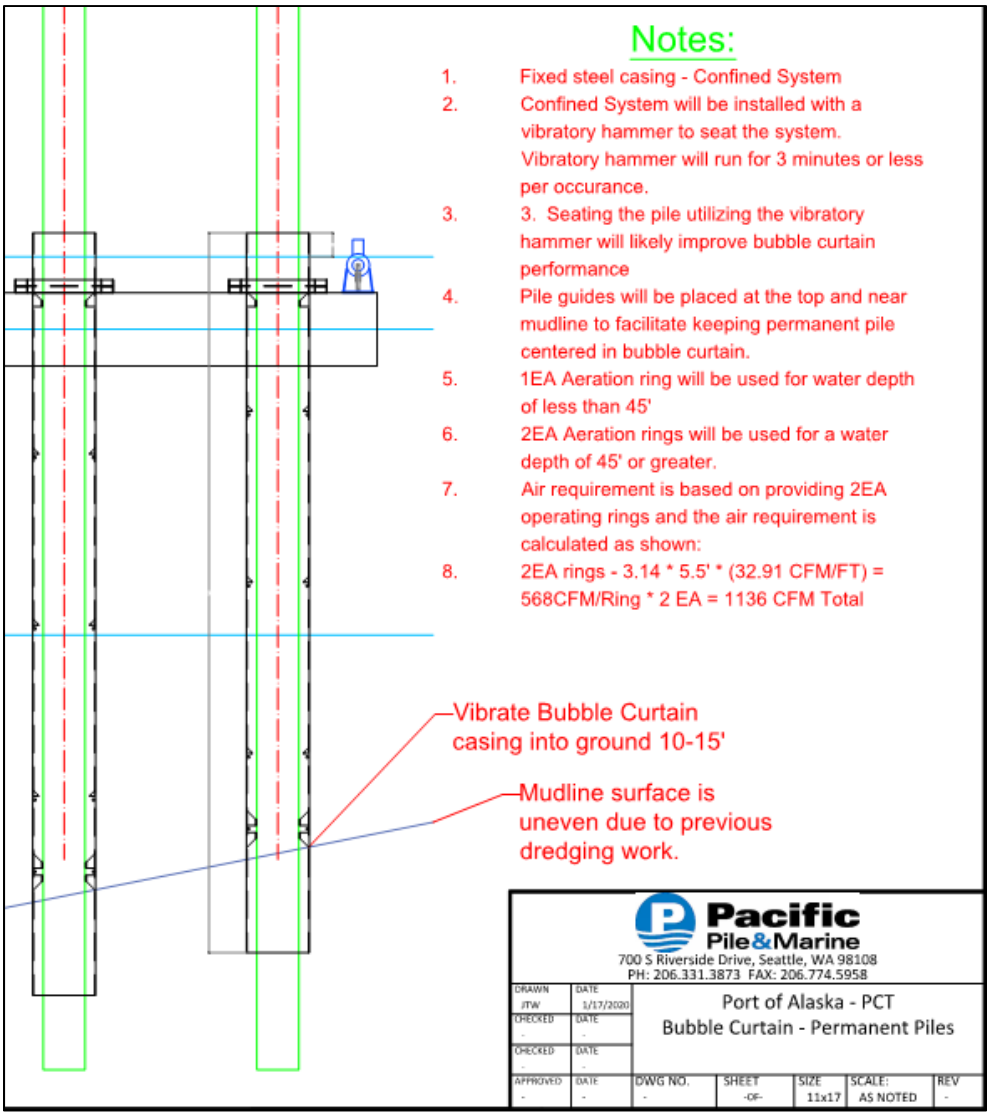

Figure 1-7. Diagram of Permanent Pile and Confinement System, Showing Arrangement Requiring Vibratory Installation of Confinement and Separate Advancement of Pile

1.4 Hearing Abilities of Marine Mammals

The marine mammals most likely to be observed within the upper Cook Inlet project area include harbor seals (*Phoca vitulina*), beluga whales (*Delphinapterus leucas*), and harbor porpoises (*Phocoena phocoena*; NMFS 2003). Species that may be encountered infrequently or rarely within the project area include killer whales (*Orcinus orca*), humpback whales (*Megaptera novaeangliae*), and Steller sea lions (*Eumetopias jubatus*). These five species form the basis for the design of the Monitoring Plan data collection strategy. Marine mammals that occur in Cook Inlet but are not expected to be observed in the project area include the gray whale (*Eschrichtius robustus*), minke whale (*Balaenoptera acutorostrata*), and Dall's porpoise (*Phocoenoides dalli*).

Hearing is a critical sense for marine mammals. They rely on sound to acoustically sense their surroundings, communicate, locate food, and protect themselves under water. To appropriately assess potential effects from pile installation, it is necessary to understand the frequency ranges that marine mammals are able to hear. NMFS recently published and is currently using updated Technical Guidance (NMFS 2018) to assess the effects of exposure to underwater anthropogenic sound on the hearing of marine mammals.

The Technical Guidance identifies the received levels, or thresholds, above which individual marine mammals are predicted to experience permanent changes (e.g., a permanent threshold shift [PTS]) in their hearing sensitivity from incidental exposure to underwater anthropogenic sound sources (NMFS 2018). NMFS considers the Technical Guidance to represent the best available scientific information and, on this basis, requires that these thresholds and weighting functions be used to assess the potential for auditory injury of marine mammals, which equates to Level A harassment under the MMPA. The models used to derive the PTS onset acoustic thresholds incorporate marine mammal auditory weighting functions in recognition of the variability in hearing sensitivity found among marine mammal species. The auditory weighting functions are defined for five functional hearing groups: low-frequency (LF) cetaceans, mid-frequency (MF) cetaceans, and high-frequency (HF) cetaceans; and otariid in water (OW) and phocid in water (PW) pinnipeds (Table 1-1).

Table 1-1. Generalized Hearing Ranges for Functional Marine Mammal Hearing Groups and Port of Alaska Species

Functional Hearing Group	Functional Hearing Range	Marine Mammals in Project Area
Low-frequency (LF) cetaceans	7 Hz to 25 kHz	Humpback whale
Mid-frequency (MF) cetaceans	150 Hz to 160 kHz	Beluga whale, killer whale
High-frequency (HF) cetaceans	275 Hz to 160 kHz	Harbor porpoise
Phocid in water (PW) pinnipeds	50 Hz to 86 kHz	Harbor seal
Otariid in water (OW) pinnipeds	60 Hz to 39 kHz	Steller sea lion

Notes: Hz = Hertz; kHz = kilohertz

Source: NMFS 2018

NMFS guidance recommends that 20 kilohertz (kHz) be used as the high-frequency limit for all pile-driving assessments of Sound Source Levels. NMFS recommends that the low-frequency limit be defined by the estimated auditory bandwidth for each functional hearing group (Table 1-1). For the PCT, the low-frequency limit is determined by the presence of humpback whales. It is generally difficult to measure below about 10 Hertz (Hz). The range of interest, and the range that will be monitored, will therefore be 20 Hz to 20 kHz.

1.5 Underwater Sound Thresholds for Marine Mammals

NMFS uses sound exposure thresholds to determine when an activity that produces sound may result in impacts to a marine mammal such that a take by harassment could occur. The IHA for the PCT uses the Technical Guidance for assessing Level A harassment levels and the NMFS interim guidance for assessing Level B harassment levels. NMFS has developed a summary of PTS onset acoustic thresholds for assessing Level A harassment, and acoustic criteria for assessing Level B harassment, of marine mammals from exposure to noise from impulsive and non-impulsive underwater sound sources (Table 1-2).

The POA proposes to implement a marine mammal monitoring and mitigation strategy that will avoid or minimize impacts to marine mammals to the greatest extent practicable. The Monitoring Plan includes two general components: acoustic measurements and visual observations of marine mammals. Visual marine mammal monitoring is discussed in more detail in the IHA Application (POA 2019).

Table 1-2. Summary of PTS Onset Acoustic Thresholds for Assessing Level A Harassment, and Acoustic Criteria for Assessing Level B Harassment, of Marine Mammals from Exposure to Noise from Impulsive (Pulsed) and Non-impulsive Underwater Sound Sources

Species Group	PTS Onset Acoustic Thresholds (Received Level)			
	Hearing Group	Impulsive		Non-impulsive (Continuous)
Level A Harassment				
Cetaceans	LF	$L_{pk,flat}$	219 dB	$L_{E, LF, 24h}$: 199 dB
		$L_{E, LF, 24h}$	183 dB	
	MF	$L_{pk,flat}$	230 dB	$L_{E, MF, 24h}$: 198 dB
		$L_{E, MF, 24h}$	185 dB	
	HF	$L_{pk,flat}$	202 dB	$L_{E, HF, 24h}$: 173 dB
		$L_{E, HF, 24h}$	155 dB	
Pinnipeds	PW	$L_{pk,flat}$	218 dB	$L_{E, PW, 24h}$: 201 dB
		$L_{E, PW, 24h}$	185 dB	
	OW	$L_{pk,flat}$	232 dB	$L_{E, OW, 24h}$: 219 dB
		$L_{E, OW, 24h}$	203 dB	
Level B Harassment				
Cetaceans	LF	160 dB rms		120 dB rms
	MF			
	HF			
Pinnipeds	PW	160 dB rms		120 dB rms
	OW			

Note: $L_{pk,flat}$ = peak sound pressure level (unweighted); $L_{E,24h}$ = sound exposure level, cumulative 24 hours

Source: NMFS 2018

2 PCT Sound Source Verification Study Objectives

Pile installation can cause elevated underwater noise levels, which have the potential to disturb or injure marine mammals. There is concern that the noise levels associated with pile installation for the PCT Project may affect marine mammals that occur within the zone of ensonification. The Monitoring Plan will be performed in compliance with MMPA and Endangered Species Act permitting requirements.

Overall goals for the PCT Hydroacoustic Monitoring Plan during Phase 1 and Phase 2 are:

- Measure SPLs at approximately 10 meters from the pile during pile installation to verify estimated sound source levels
- Measure SPLs at approximately 300 to 1,000 meters from the pile to verify estimated distances to the Level A and Level B harassment zones
- Measure SPLs at a distance of approximately 3 kilometers from the pile to aid in estimation of transmission loss (TL) rates

The Monitoring Plan will have the following objectives:

- Phase 1: Measure and record sounds for 24-inch, 36-inch, and 48-inch piles with the bubble curtain implemented:
    - A sample size of five to ten piles of each size (24-inch piles, 36-inch piles, and 48-inch piles) is planned to be measured. To the extent feasible, the sampled piles will be measured during installation in a variety of different water depths and locations (near shore, at the face of the loading platform).
    - No on-off testing of the bubble curtain will take place. However, the air flow to the annulus between the pile and casing will be adjusted as needed to optimize bubble curtain performance.
    - Of the piles that will be measured, one to two piles of each size may be measured during proofing using impact installation methods if logistics are able to be worked out (proofing of piles generally is limited to a short time frame, approximately 5-10 minutes).
    - Vibratory installation of the bubble curtain casing for one to two permanent piles of each size will be measured.
- Phase 2: Measure and record sounds for 144-inch piles:
    - Two 144-inch piles driven with an impact hammer will be measured.
    - If SPLs for the 144-inch piles are highly variable, a third pile may be monitored.
    - If battered piles are installed without a bubble curtain, a sample of two to five piles is planned to be measured depending on pile installation scheduling.
    - No on-off testing of the bubble curtain will take place. However, the air flow to the annulus between the pile and casing will be adjusted as needed to optimize bubble curtain performance.
- Analyze data for all piles measured in accordance with NMFS recommendations and best-practices protocol:
    - Compute the SPL for each pile at the measurement site and at 10 meters, and compute the TL coefficient based on measurements near 10 meters, 300 to 1,000 meters, and 3 to 4 kilometers. The TL coefficient will be computed independently for each pile for which measurements are

taken at the same time from two or more locations. The TL coefficient will also be computed for the complete data set for each pile size and hammer type.

  - Compute the areas of the PTS onset acoustic thresholds for assessing Level A harassment, and acoustic criteria for assessing Level B harassment based on the computed SSLs and TLs from the measurements of single piles.

- Verify that the Level A and Level B harassment zones predicted for the PCT IHA are adequate to protect marine mammals and their hearing, and are adequate for application to future PAMP construction projects. If necessary, make adjustments to the harassment zones.
- Report to NMFS on Monitoring Plan findings.

It is possible that, due to weather, safety, equipment availability, logistics, and other unforeseen constraints, fewer piles will be measured than anticipated and planned. The POA and its contractors will attempt to measure the full set of piles as described here, but this may not be attainable. Results from hydroacoustic monitoring will be available to assist in design decisions for future PAMP construction projects, as well as in developing monitoring and mitigation methods to reduce potential impacts to marine mammals.

3 Monitoring Plan Methodology

Any deviations from this methodology must be pre-approved by the POA before the work takes place.

3.1 Roles and Responsibilities

The hydroacoustic monitoring team coordinator will manage implementation of the Monitoring Plan (data collection, analysis, and reporting) in close coordination with the PCT construction contractor. A single point of contact will be identified by the construction contractor on a daily basis on both the hydroacoustic crew and construction crew to provide the lead authority for that day. The hydroacoustic coordinator and daily hydroacoustic point of contact are responsible for understanding all project-specific hydroacoustic monitoring requirements. The Port Construction Manager/Resident Engineer will provide oversight to all contractors.

3.2 Sound Pressure Levels

The methodology described below is consistent with a 31 January 2012 guidance memorandum issued by NMFS titled *Data Collection Methods to Characterize Impact and Vibratory Pile Driving Source Levels Relevant to Marine Mammals*.

3.2.1 Data Collection

3.2.1.1 Selection of Piles

Before the Monitoring Plan commences, the hydroacoustic coordinator, construction contractor, and Port Construction Manager/Resident Engineer will meet to determine which piles will be included in the Monitoring Plan. Considerations will include:

- Pile location.
- Hammer type – both vibratory and impact pile installation will be sampled.
- Attenuation – attenuated (plumb) piles and unattenuated (battered) piles are planned to be sampled.
- Water depth – to the extent feasible, the sampled piles will be measured during installation in a variety of different water depths and locations (near shore, at the face of the loading platform).
- Access to measurement positions.
- Safety of the hydroacoustic and construction crews.

3.2.1.2 Hydrophone Positions

Monitoring underwater sound in Knik Arm and the active shipping port during construction activity is challenging. Therefore, the positions at which hydrophones would be deployed are subject to change. However, all reasonable attempts will be made to position hydrophones at approximately 10 to 20 meters (33 to 65 feet), 300 to 1,000 meters (1,000 to 3,000 feet), and 3 to 4 kilometers (2 to 3 miles). Each measurement distance will include a single hydrophone placed within an acoustic line of sight to the pile. Near-field hydrophones will be attached to a dock, barge, or other structure within the POA. Mid-range hydrophones will be placed at a temporary location with the aid of a small vessel deployed from the POA and will be moored. Where possible, a hydrophone will be located in the lower half of the water column, between 2 meters off the bottom and mid-depth. For example, if the mean water depth during pile installation is anticipated to be 10 meters (33 feet) at the pile, the hydrophone will be positioned at a depth of 5 to 8 meters (17 to 27 feet). If the 1-kilometer moored deployment is lost or

damaged, the Port may switch to deploying a drifting hydrophone by vessel. The 3-kilometer hydrophone will be placed perpendicular to the Port, approximately 3-4 kilometers (2 to 3 miles) from the docks, moored in a safe location. However, if the moored location results in equipment loss or damage, or is unable to detect vibratory and impact sounds, the Port may relocate the 3-kilometer hydrophone to a more suitable location, which may include other moored locations or placement attached to structures associated with Port MacKenzie. Hydrophones will be placed out of shipping lanes and Port operational areas, outside of active U.S. Army Corps of Engineers (USACE) maintenance dredging and disposal areas, and will avoid noted irregular bathymetry, such as drastic rises or sills, between the source and hydrophones. Moored deployments are also subject to USACE and Alaska Department of Natural Resources permitting requirements, and may not be feasible due to required timelines.

3.2.1.3 Equipment Required

Exact hydrophone design will be determined prior to deployment, and may be adjusted throughout the program to improve the chances of successful data collection. Designs will be based on work from previous studies (e.g., the TPP in 2016), as well as other studies carried out in the region (Lammers et al. 2013; Castellote et al. 2019) and advice from experts in the field.

The hydrophone used for SPL data collection must be appropriate for the frequency range of measurements (i.e., 20 Hz to 20 kHz; Section 1.4). A Reson Model TC4013 or TC4033 or equivalent hydrophone with a known and flat frequency response curve across the bandwidth of measurements will be used. The hydrophone will be appropriate for measuring sound across the frequency range. The particular hydrophone sensitivity (with gain stage included) will be noted. A minimum sampling rate of 48,000 Hz will be used during monitoring. Receiving sensitivities must be sufficient to measure high acoustic pressures. The hydrophone and associated electronic recording networks must be capable of measuring peak pressures as high as 220 dB re: 1µPa without distortion. Care must be taken at greater distances to measure levels above instrument background. Strumming will occur if there is tension on the signal line, so a leaded line will be deployed to reduce interference for dipping hydrophones. This makes the line rigid so weight is distributed evenly along the line and less on the signal cable.

3.2.1.4 Sampling Schedule

During Phase 1, two sampling periods may be required for pile installation in order to adequately capture sound levels for all pile sizes during each installation technique. The PCT will be constructed simultaneously from the marine side and the land side. The marine approach will include a marine derrick barge mounted with an impact hammer for installing the 48-inch platform piles. The landside approach will include a crawler crane to construct both the temporary construction work trestle and the permanent trestle. The crawler crane will work from the landside out in a leap-frog or top-down construction technique to advance construction out to the platform. The crawler crane will include accommodations for both a vibratory hammer and an impact hammer to install the temporary 24-inch and 36-inch piles and permanent 48-inch piles as the trestles are advanced out to the platform.

Sound levels for vibratory installation of 24-inch and 36-inch piles and impact installation of 48-inch piles will be measured. Noise levels during impact proofing of 24-inch or 36-inch piles may be measured (reference discussion above), as logistics allow. Note that 24-inch and 36-inch piles that are part of the temporary trestle will first be installed near shore in mud or very shallow water, which precludes collection of underwater measurements and in some instances deployment of the bubble curtain; successive installations will take place farther offshore. Marine-based installation of 48-inch piles will be done simultaneously and may provide the opportunity to collect the full range of pile sizes and hammer types during a single sampling period if scheduling of multiple activities can be arranged.

During Phase 2, sound measurements for impact installation of 144-inch piles will occur. Sound measurements for vibratory installation of 36-inch piles may occur during Phase 2 if adequate monitoring is not obtained during Phase 1.

The construction contractor will keep detailed and accurate notes of start and stop times and ramp-up times, as well as the times that the bubble curtain is being utilized (see Section 4 for additional hydroacoustic monitoring requirements).

Note that the POA intends for piles to be measured from start to finish; however, potential unforeseen circumstances may limit this option on some piles.

3.2.2 Data Analysis

Sound measurements will be reported in overall peak, SPL (in terms of pulse rms for impact pile driving), and SEL across the entire frequency band for each of the functional hearing groups found in the project area (i.e., 20 Hz to 20 kHz). Note that all data collected will be unweighted; weighting will occur during post-processing. Each pile installed will be considered a single event. Impact pile sound pulses will be characterized by measuring the rms SPL. This requires integrating sound from each pulse across the portion where 90 percent of the acoustic energy is contained (using the 5th–95th percentiles to establish the time window) and averaging across all waves in the pile-installation event (i.e., as demonstrated in Figure 1 of Madsen et al. 2006). Peak pressure will be the maximum absolute instantaneous pressure in that pulse. The integration of sound pressure over a 1-second period of the pulse would be the SEL.

3.3 Transmission loss

Transmission loss in the POA marine environment during pile installation of 48-inch steel pipe piles was measured during the 2016 TPP (Austin et al. 2016) and summarized in the IHA Application (POA 2019).

A regression analysis of sound levels will be used to develop the relationship between distance and sound level for all pile sizes measured. This would be performed for peak pressure, rms SPL, and SEL. The regression provides the statistical relationship of sound level over the range of distances measured. The source level is expressed as the reference sound level (derived as a 1-meter source level) and a TL coefficient expressed as a multiplier of a common Logarithmic function (base 10) of the distance. Note that the sound level is not a true sound level; it is a sound level that best fits the regression relationship of sound and distance.

3.4 Other Sources of Noise

During collection of hydroacoustic data, the start times, end times, and types of unavoidable extraneous noise sources such as vessel traffic and air traffic, if any, will be recorded by the hydroacoustic monitoring team. Measurements collected during time periods with significant levels of additional noise must be removed from the data set before analysis. Of particular concern are USACE dredging operations at the POA and potential pile installation at other locations in Knik Arm. While attempts to reduce interference from dredging or other construction projects will be made, both dredging and other construction projects are permitted separately, and schedules may not be able to be adjusted for this study.

This page intentionally left blank.

4 Contractor Requirements

4.1 Data Collection

The hydroacoustic monitoring team will collect data both electronically and on data forms. Data forms used during the Monitoring Plan will also be submitted by the construction contractor for review by the both the Port Construction Manager/Resident Engineer and NMFS at least 2 weeks prior to the start of PCT in-water construction. Data forms will be scanned, backed up, and submitted for review by the Port Construction Manager/Resident Engineer within 24 hours of each collection time period.

4.1.1 Data Form

At a minimum, the hydroacoustic crew will collect the following data on the data form for each pile being recorded (each pile will be recorded separately):

- Date
- Contractor name
- Pile number
- Pile size
- Pile location relative to the hydrophone
- Activity (e.g., vibratory installation, impact installation, removal)
- Number of strikes per pile (impact)
- Bubble curtain (used or not used)
- Water depth at the work site (i.e., at the pile being installed) every 30 minutes during pile installation or removal
- Hydrophone depth
- Depth to which each pile was driven
- A general description of the characteristics of the substrate into which each pile was driven

4.1.2 Reporting

Data summaries will be prepared to report the following information:

- For each recorded impact pile-driving event, the following will be reported:
    - The mean, median, and maximum values of the peak pressure, defined as the maximum absolute value of the instantaneous pressure (overpressure or under pressure)
    - The mean, median, and maximum values of the rms sound pressure across 90 percent of the pile strike energy (pulse rms)
    - The mean, median, and maximum values of the pulse duration used to compute the rms pulse SPL, measured on impact piles at all distances
    - The mean, median, and maximum values of the SEL, measured for each second or pile strike, and the accumulation of SEL across the duration of the event.
- Time history trace of measured sound levels.

- Mean one-third-octave band spectra and samples of the computed median power spectral density for selected events that represent all sampling scenarios (in final report)

Following the completion of all monitoring activities, a Monitoring Plan Report will be prepared. The report will describe the sources of the sound, the environment, and the measurements. The methodology employed to make the measurements will be described. Results will be presented as overall sound pressure levels and displays of one-third-octave band sound levels. Specific sounds will be identified.

Preliminary reports are available following measurement events; however, these are based on live measurements and subject to change as analysis of audio recordings provides pulse-specific measurements and the elimination of contamination to the data set (e.g., filtering of very low-frequency background noise). The intent is to measure these sounds live and minimize any post-measurement analyses. A preliminary field summary will be available to NMFS within 6 weeks of completion of the field measurements, and a final full report will be available within 90 days.

In addition, audio recordings of pile-driving sounds, which can be measured/analyzed per the requirements of this Monitoring Plan, will be collected and stored in a digital format that can be analyzed using commercially available software (i.e., .wav format).

4.2 Quality Control and Quality Assurance

Hydroacoustic equipment shall be tested within 48 hours prior to acoustic monitoring to ensure that the equipment is fully functional. The hydroacoustic monitoring team shall perform and document a calibration of all applicable equipment prior to initiation of sound monitoring. The hydroacoustic monitoring team will resolve any equipment issues that arise prior to the start of project activities.

4.3 Reporting

Communication is a key element to successful construction of the PCT. The hydroacoustic monitoring team coordinator, construction contractor, and Port Construction Manager/Resident Engineer will communicate on a daily basis about the Monitoring Plan.

4.3.1 For Each Measurement Day

Within 2-3 workdays of the completion of pile installation, the hydroacoustic monitoring team coordinator will provide the POA with a preliminary summary report on each individual pile that was measured. This will include peak SPL, median rms levels (pulse or continuous), and cumulative SEL. This summary report is meant to provide preliminary results in summary format. The pile report form will be provided to the POA and NMFS for review at least 2 weeks prior to the commencement of the measurement portion of the Monitoring Plan. Due to limited available information for 144-inch piles, once the initial monitoring of the 144-inch piles is complete, a draft data summary will be submitted to the POA and NMFS within 1–2 weeks.

4.3.2 Data Processing and Final Report

The hydroacoustic monitoring team is responsible for post-processing of data. The final report will demonstrate the achievement of the Monitoring Plan objectives. The report, at minimum, will include:

- Methodology: field data collection, post-processing, data analysis methods, and Quality Assurance/Quality Control documentation
- Peak, SPLs, and SELs for each pile monitored for each measurement position

- Unweighted frequency spectra and weighted frequency adjustments of SEL levels and applicable computation of marine mammal weighting frequency adjustments
- Computation of TLs intended to estimate sound levels over distance to assist in the assessment of the marine mammal PTS and Level B harassment isopleths based on at least two measurements

A Microsoft™ Word version of the report will also be provided to facilitate review and editing.

Additionally, the raw data and data summary in one-third-octave band intervals will be provided to the Port Construction Manager/Resident Engineer and, following POA review and approval, provided to NMFS. This includes high-quality audio recordings, digital data that can be viewed and analyzed using commercially available software, calibration documentation, field notes, measurement positions coordinates (i.e., GPS data), and photo documentation. For each pile, overall SPLs and frequency spectra (minimum one-third-octave band center) data shall be provided for each pile strike. For each pile, the average and median sound levels shall be provided.

This page intentionally left blank.

5 Literature Cited

Austin, M., S. Denes, J. MacDonnell, and G. Warner. 2016. *Hydroacoustic Monitoring Report, Anchorage Port Modernization Project Test Pile Program*. Prepared by JASCO under contract of Kiewit Infrastructure West Co. for the Port of Anchorage.

Blackwell, S.B. 2005. Underwater measurements of pile-driving sounds during the Port MacKenzie dock modifications, 13-16 August 2004. Rep. from Greeneridge Sciences, Inc., Goleta, CA, and LGL. Alaska Research Associates, Inc., Anchorage, AK, in association with HDR Alaska, Inc., Anchorage, AK, for Knik Arm Bridge and Toll Authority, Anchorage, AK, Department of Transportation and Public Facilities, Anchorage, AK, and Federal Highway Administration, Juneau, AK.

Castellote, M., B. Thayre, M. Mahoney, J. Mondragon, Jeffrey, M. Lammers, and R. Small. 2019. Anthropogenic Noise and the Endangered Cook Inlet Beluga Whale, Delphinapterus leucas: *Acoustic Considerations for Management. Marine Fisheries Review*. 80.63.10.7755/MFR.80.3.3.

HDR (HDR, Inc.). 2011. *Knik Arm Crossing Proof of Concept Study*. Prepared for Knik Arm Bridge and Toll Authority by HDR Alaska. December 2011.

Lammers, M.O., M. Castellote, R.J. Small, S. Atkinson, J. Jenniges, A. Rosinski, J.N. Oswald, and C. Garner. 2013. Passive acoustic monitoring of Cook Inlet beluga whales (Delphinapterus leucas). *Journal of the Acoustical Society of America* 134: 2497-2504.

Madsen, P.T., M. Johnson, P.J.O. Miller, N. Aguilar Soto, J. Lynch, and P. Tyack. 2006. "Quantitative measures of air-gun pulses recorded on sperm whales (*Physeter macrocephalus*) using acoustic tags during controlled exposure experiments." *Journal of the Acoustical Society of America* 120(4): 2366-2379.

NMFS (National Marine Fisheries Service). 2003. Subsistence Harvest Management of Cook Inlet Beluga Whales - Final Environmental Impact Statement. Available online at http://alaskafisheries.noaa.gov/protectedresources/whales/beluga/eis2003/final.pdf.

———. 2018. *2018 Revisions to: Technical guidance for assessing the effects of anthropogenic sound on marine mammal hearing (Version 2.0): Underwater acoustic thresholds for onset of permanent and temporary threshold shifts.* National Marine Fisheries Service, Silver Spring, MD. U.S. Department of Commerce, NOAA. NOAA Technical Memorandum NMFS-OPR-59.

NOAA (National Oceanic and Atmospheric Administration). 2015. Tidal Datums, Anchorage, AK, Station ID: 9455920, NOAA Tides & Currents. http://tidesandcurrents.noaa.gov/noaatidepredictions/NOAATidesFacade.jsp?Stationid=9455920. Anchorage, AK&type=Datums. Accessed 02 January 2015.

POA (Port of Anchorage). 2016. *Anchorage Port Modernization Program Test Pile Program Report of Findings*. Prepared by HDR, Inc., Anchorage, AK for the Port of Anchorage under contract to CH2M.

———. 2019. *Port of Alaska Modernization Program, Petroleum and Cement Terminal Project: Application for a Marine Mammal Protection Act Incidental Harassment Authorization.* Prepared by HDR, Inc., Anchorage, AK; and Illingworth & Rodkin, Petaluma, CA; for the Port of Alaska under contract to CH2M.

SFS (Scientific Fishery Systems, Inc.). 2009. *2008 Underwater Noise Survey during Construction Pile Driving.* Prepared by SFS under contract to Integrated Concepts and Research Corporation (ICRC), Anchorage, Alaska, for the Port of Anchorage, Marine Terminal Development Project.

Shelden, K.E.W., D.J. Rugh, K.T. Goetz, C.L. Sims, L. Vate Brattström, J.A. Mocklin, B.A. Mahoney, B.K. Smith, and R.C. Hobbs.

URS (URS Corporation). 2007. *Port of Anchorage Marine Terminal Development Project underwater noise survey test pile driving program, Anchorage, Alaska. Final underwater noise report*. Prepared for Integrated Concepts and Research Corporation, Anchorage, AK.

USDOT (U.S. Department of Transportation) and POA (Port of Anchorage). 2008. Rulemaking and letters of authorization application for construction activities associated with the Port of Anchorage Marine Terminal Redevelopment Project, July 15, 2009 - July 15, 2014. Prepared by Integrated Concepts & Research Corporation, Anchorage, AK.