REQUEST FOR INCIDENTAL HARASSMENT AUTHORIZATION UNDER THE MARINE MAMMAL PROTECTION ACT FOR SAND ISLAND PILE DIKE SYSTEM TEST PILES

CLATSOP COUNTY, OREGON

Submitted to:
Office of Protected Resources
National Marine Fisheries Service
National Oceanographic and Atmospheric Administration

SUBMITTED FEBRUARY 22, 2019
REVISED JULY 22, 2019
U.S. ARMY CORPS OF ENGINEERS
PORTLAND DISTRICT
333 SW 1ST. AVENUE, PORTLAND, OREGON 97204

Table of Contents

1.1 Overview 1
1.2 Pile Dike Design and Test Pile Installation 3
1.3 Construction Methods 7
1.4 Noise Emission 10
1.4.1 In-air Noise 10
1.4.2 In-water Noise 10
1.5 Best Management Practices, Mitigation and Impact Minimization Measures 11
2.0 Dates and Duration, Specified Geographic Region 11
2.1 Dates and Duration 11
2.2 Specified Geographic Region 11
3.0 Marine Mammal Species and Numbers 12
4.0 Affected Species Status and Distribution 17
4.1 Cetaceans 17
4.1.1 Killer Whale 17
4.1.2 Humpback Whale 17
4.1.3 Gray Whale 18
4.1.4 Harbor Porpoise 19
4.2 Pinnipeds 19
4.2.1 Steller Sea Lion 20
4.2.2 California Sea Lion 21
4.2.3 Harbor Seal 21
5.0 Type of Incidental Take Authorization Requested 21
5.1 Permanent Threshold Shift Isopleths 22
5.2 Level B Disturbance 22
6.0 Take Estimates for Marine Mammals 23
6.1 Marine Mammal Abundances in Project Area 24
6.1.1 Cetacean Abundances 24
6.1.2 Pinniped Abundances 25
6.2 Incidental Take 25
6.2.2 Take Estimates for Pinnipeds 27
7.0 Anticipated Impact of the Activity 29
8.0 Anticipated Impacts on Subsistence Uses 29
9.0 Anticipated Impacts on Habitat 30

10.0 Anticipated Effects of Habitat Impacts on Marine Mammals 30
11.0 Mitigation Measures to Protect Marine Mammals and Their Habitat 30
12.0 Mitigation Measures to Protect Subsistence Uses 31
13.0 Monitoring and Reporting 31
14.0 Suggested Means of Coordination 34
15.0 References 36

Figure 1. Sand Island Pile Dike System Location. 2
Figure 2. Sand Island Pile Dikes. 3
Figure 3. General features of existing Columbia River pile dikes. 4
Figure 4. Proposed Repair Design for Pile Dikes. 5
Figure 5. Steel Pile Offset Alignment. 5
Figure 6. Existing Alignment. 6
Figure 7. Sleeve Existing Piles. 7

Table 1. Pile Driving Summary. 9
Table 2. Estimated Unattenuated Underwater Sound Pressure Levels Associated with Vibratory Pile Driving and Impact Hammer Pile Driving 11
Table 3. Marine Mammal Species in the Vicinity of West and East Sand Island 13
Table 4. Marine Mammal Hearing Groups, Hearing Range, and Level B Disturbance Thresholds 16
Table 5. Marine Mammal Hearing Groups and Level A Underwater Injury 16
Table 6. Average Number of Pinnipeds per Month on South Jetty, 2000-2014 (WDFW) 20
Table 7. Level A PTS and Level B Disturbance Isopleths Marine Mammals 23
Table 8. Abundance Estimates from the South Jetty. 25
Table 9. Take Calculations for Pinnipeds. 28
Table 10. Incidental Take Estimates for the Sand Island Pile Dikes Test Piles. 29

Appendix A: Noise Level Worksheets
Appendix B: Isopleth Figures for 24-inch Unattenuated Impact Pile Driving for Pile Dikes 4.01 and 6.37, for 24-inch Unattenuated Vibratory Pile Driving for Pile Dikes 4.01 and 6.37, and for 24-inch Unattenuated Vibratory Pile Removal for Pile Dikes 4.01 and 6.37

1.0 Description of Specified Activity

The U.S. Army Corps of Engineers, Portland District (Corps) is applying for Incidental Harassment Authorization (IHA) under section 101(a)(5) of the Marine Mammal Protection Act of 1972, as amended, for the take of marine mammals incidental to the Sand Island Pile Dike System Test Piles project. The Sand Island pile dike system consists of four pile dikes near the mouth of the Columbia River, between river mile (RM) 4 and RM 7. The Sand Island pile dike system is one component of a system of structural and operational measures that were authorized to establish and maintain the federal navigation channel (FNC). The Corps plans to implement the project between September 15 and November 30 of 2019; the project duration is expected to be 15 days. The proposed activities have the potential to cause Level A and Level B harassment to marine mammals and therefore the Corps is requesting Incidental Harassment Authorization.

1.1 Overview

The U.S. Army Corps of Engineers, Portland District (Corps) proposes to drive test piles in order to investigate the feasibility of different construction methods at two of the four Sand Island pile dikes at the Mouth of the Columbia River (MCR) (Figure 1). The Sand Island pile dikes are comprised of four pile dikes, which are named according to RM location, at RMs 4.01, 4.47, 5.15, and 6.37 (the pile dike at RM 6.37 is also referred to as the Chinook pile dike). Three of the pile dikes are connected to West Sand Island and East Sand Island, and the fourth pile dike in open water runs parallel to the Chinook Channel on the upstream side (Figure 2). The Sand Island pile dikes are part of the Columbia River pile dike system and were installed in the 1930's. The three pile dikes connected to West Sand Island and East Sand Island are located within Oregon, while the fourth pile dike in open water spans both Oregon and Washington. The Corps intends to restore full functionality of pile dikes in the future but needs to drive test piles in order to inform possible design.

The Corps maintains pile dike fields and other in-water hydraulic control structures to minimize dredging needs by providing a reliable channel alignment, reducing sediment deposits in the channel, and reducing riverbank erosion. This, in turn, reduces the need for maintenance dredging.

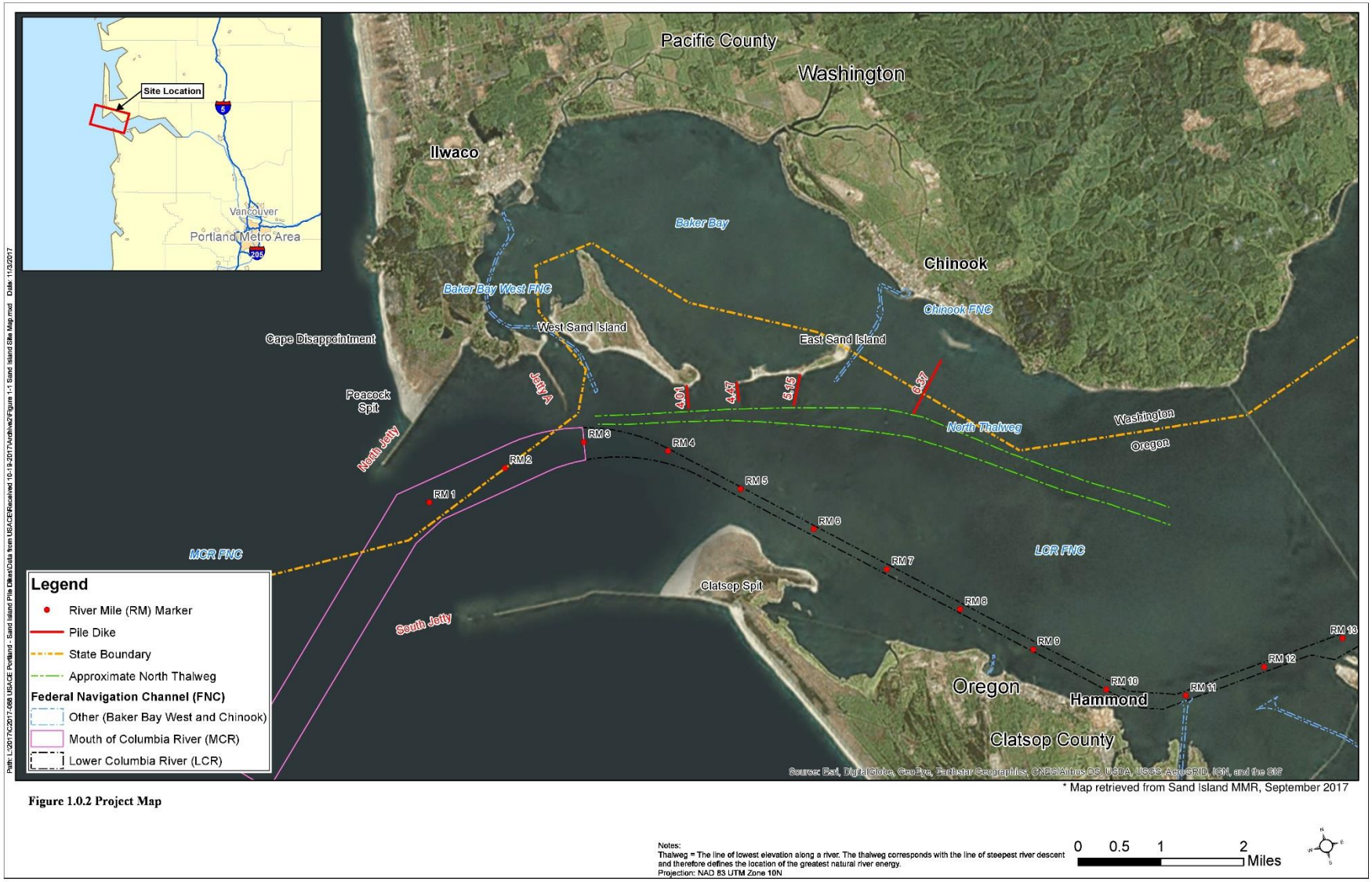

Figure 1. Sand Island Pile Dike System Location.

Figure 2. Sand Island Pile Dikes.

1.2 Pile Dike Design and Test Pile Installation

Pile dikes are permeable groins extending into the river. They consist of two or three rows of vertical untreated timber pilings driven on 2.5-feet centers alternately placed on each side of horizontal spreader piles and fastened together (Figure 3). A cluster of piles with one or more taller piles, called an outer dolphin with king piles, is used to anchor and mark the end for navigational safety. There is rock apron at the base of the vertical piles and at the shore connection to protect against scour. The existing pile dikes have deteriorated greatly due to lack of maintenance.

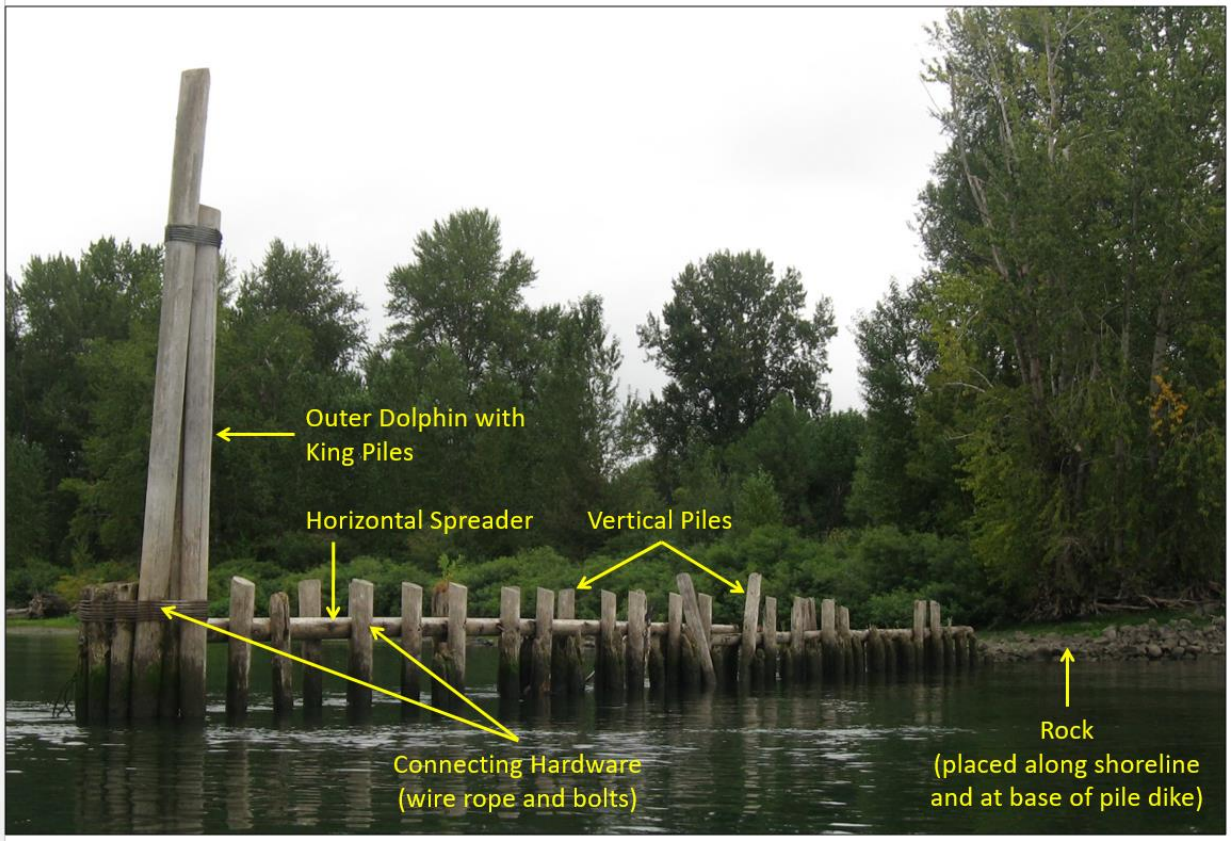

Figure 3. General features of existing Columbia River pile dikes.

The purpose of the Sand Island Test Piles project is to evaluate design alternatives for future repairs. Replacement of the existing, deteriorated piles with new piles is necessary. Records from previous timber pile dike repairs concluded that trying to drive new timber piles through the existing scour protection rock apron at the base of the pile dike was challenging and would likely not meet sufficient embedment depths or alignment tolerances needed for structural and functional requirements. The Corps determined that temporarily removing the existing scour protection rock to drive timber piles would not be feasible for a number of reasons, including concerns that removal could further destabilize the morphology. The remaining design options were to offset the alignment to avoid most of the existing scour protection rock or explore stronger pile material such as steel to drive piles down the same alignment as the existing structure. The offset alignment design option requires driving piles near the outer edge of the existing scour protection rock, where water depths are greater. The thickness of the existing scour protection rock at the base of the pile dike is estimated to be from 2 to 10 feet thick, though this may vary depending on location. The Corps determined that timber piles had insufficient structural capacity to support the environmental loading under those conditions. Therefore, steel piles were selected for all potential design options. See Figure 4 for the proposed repair design.

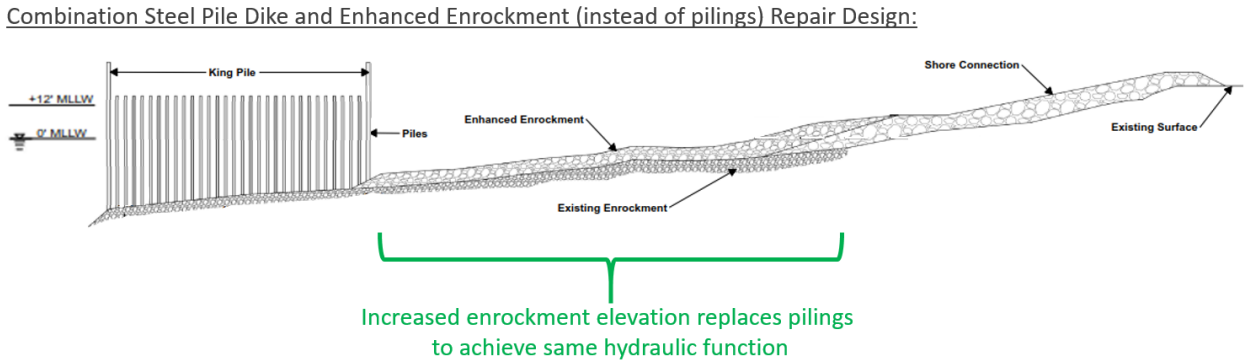

Figure 4. Proposed Repair Design for Pile Dikes.

Preliminary pile dike repair design revealed three options, hereafter described as the "offset alignment (Design A)," "existing alignment (Design B)," and "sleeve existing piles (Design C)." The Corps needs to drive test piles in order to evaluate which of these three designs could achieve the most favorable hydraulic and sediment transport functions, while also considering costs associated with construction and long-term maintenance.

Offset Alignment (Figure 5)
Design A offsets the alignment of the rows of steel piles up to the edge of the existing scour protection rock apron, where conditions for driving piles are more favorable. Additional rock would be required to provide a scour protection rock apron for the new steel piles. The pile configuration needed to achieve hydraulic and sediment transport functions includes two rows of steel piles, staggered and spaced 6.2 feet on center (Figure 5). The length of individual piles required for this design is greatest because minimum embedment depths are between approximately 30 and 40 feet, in addition to greater existing water depths along the offset alignment. The team has the highest confidence in being able to feasibly construct this design.

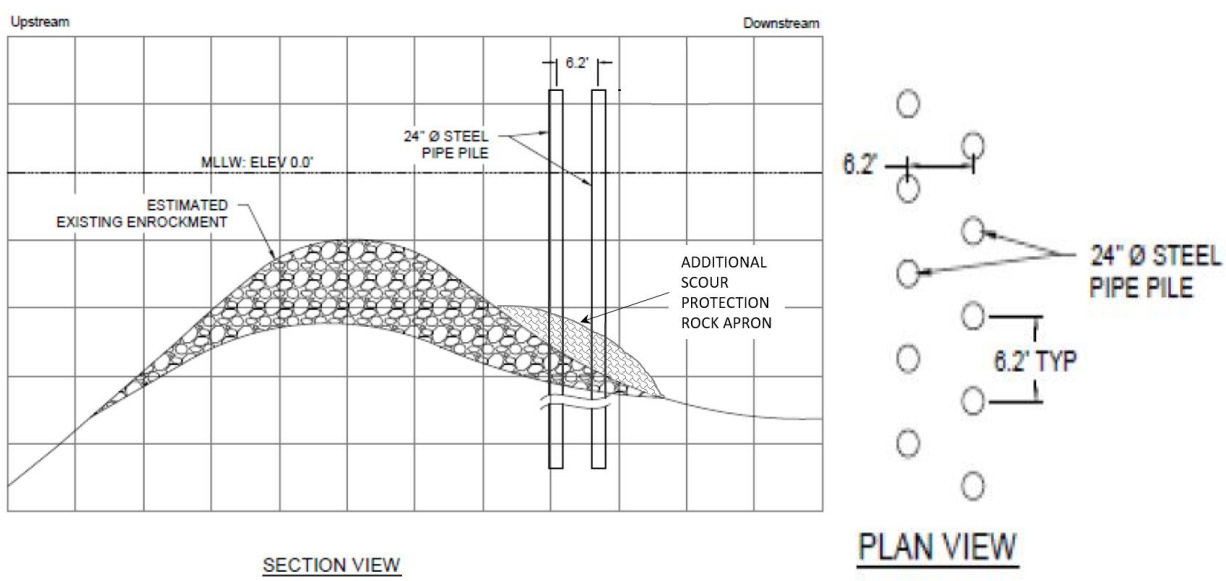

Figure 5. Steel Pile Offset Alignment.

Existing Alignment (Figure 6)
Design B uses the same pile configuration as the Offset Alignment design above, but is located along the alignment of the existing pile dike, where the existing scour protection rock apron is thickest and pile driving conditions most likely will be difficult. If piles can be driven through the crest, the size of the piles may decrease to a minimum diameter of 16 inches and the spacing of the piles may decrease to a minimum spacing of 5 feet on center. The benefit of this design is that it uses the existing scour protection rock apron to protect the new piles, and embedment depths and pile lengths will be reduced because of shallower water depths along the crest of the existing alignment.

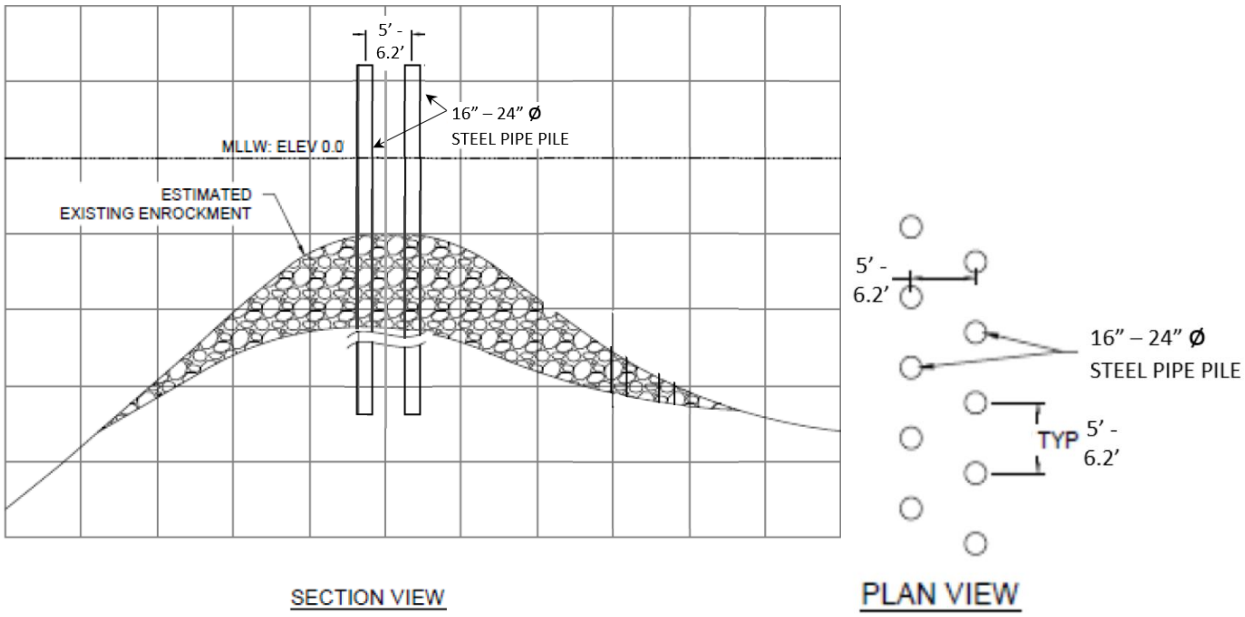

Figure 6. Existing Alignment.

Sleeve Existing Piles (Figure 7)
Design C would entail sleeving individual existing timber piles with hollow 24-inch diameter steel piles. Encasing existing piles will remove the need to drive piles through existing scour protection, especially where existing timber piles are currently displacing or have previously displaced the rock. This design differs from the previous designs in its configuration because the spacing is determined by the existing timber piles, which consist of three staggered rows of piles spaced 5 feet on center. A select number of existing piles in two adjacent rows would be sleeved in order to achieve hydraulic effects that are equivalent to the other designs shown above. In areas where existing piles are missing or damaged and sleeving is not possible, new steel piles would be driven through existing rock.

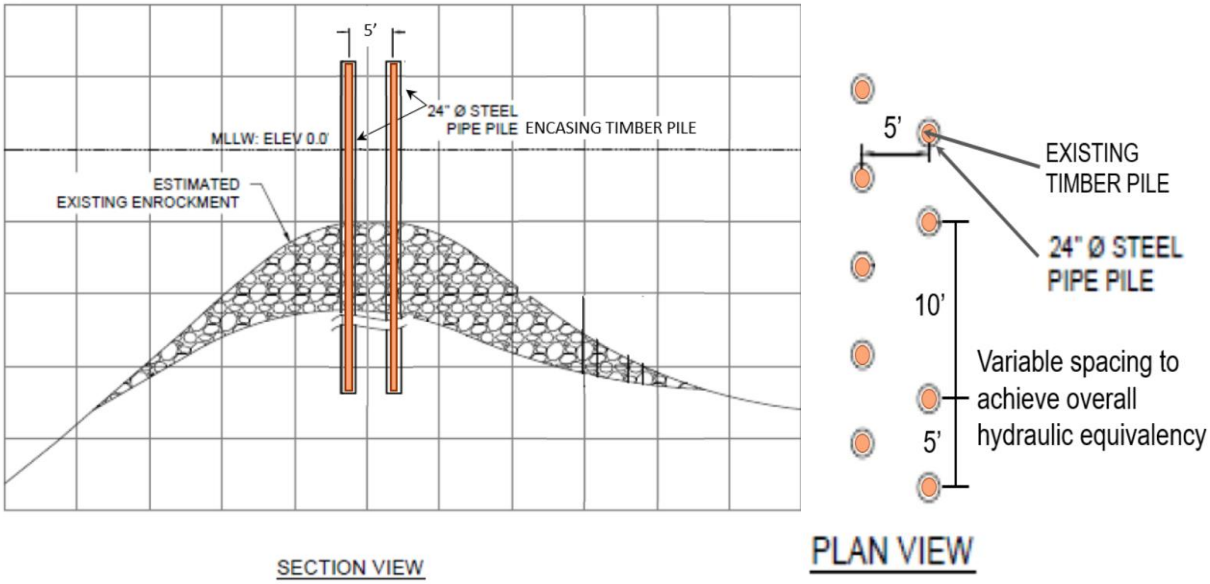

Figure 7. Sleeve Existing Piles.

1.3 Construction Methods

The Sand Island Pile Dike System Test Piles project entails testing the three aforementioned designs at two pile dikes, each with 9 piles. The Corps has designed a specific testing sequence in which up to 3 tests could occur at each of those 18 piles, yielding a total of 41 pile driving events over a maximum of 41 days (see

Table 1). The test sequence at any given location includes an attempt with a vibratory hammer or impact hammer with various shoes including ring, cone, or rock tip (

Table 1).

The maximum 41 days of work includes the following estimates for various pile driving activities:

- Up to 20 days of impact driving only (steel piles)
- Up to 18 days of impact driving AND vibratory installation/removal of steel piles
- Up to 3 days for vibratory removal of timber piles only

Piles are generally installed by a rig which supports the pile leads, raises the pile, and operates a hammer. The rigs will use either impact hammers or vibratory drivers. Up to ten existing timber piles may be removed by vibratory methods, pulling, cutting or snapping at the approximate level of the enrockment. Removal with a vibratory hammer is expected to take approximately 5 minutes. After timber pile removal, one of the test methods would be attempted. When refusal criteria is reached, the attempt would cease and the next test method would be attempted as prescribed in the work summary.

The contractor may use barge-mounted cranes equipped with survey grade positioning software to ensure the piles are installed with precision. Driving shoes may also be used. Should unusually difficult driving conditions be encountered, the contractor will be allowed to temporarily excavate the minimum amount of existing scour protection rock needed in order to drive new piles. The contractor will then reinstall the rock to provide scour protection for new piles. Barges will transport all equipment and material to and from the site and serve as staging platforms for construction. Barges may be spudded or anchored into position. Test piles will be removed upon completion of the tests.

Table 1. Pile Driving Summary.

Pile Location and Alignment	1st Test	2nd Test	3rd Test	Number of Timber Piles for Vibratory Removal (maximum)	Number of Steel Pile Driving Events with Vibratory Hammer	Number of Steel Pile Driving Events with Impact Hammer	Number of Steel Piles for Vibratory Removal after testing (maximum)
4-1C Center	Pile Only[1]	Ring[3]	Cone[4]		1	2	1
4-1F Offset	Pile Only	Ring	Cone		1	2	1
4-2C Center	Ring	Cone	--			2	1
4-2F Offset	Cone	Rock Tip[5]	--			2	1
4-3C Center	Ring	Cone	--			2	1
4-3F Offset	Ring	Cone	--			2	1
4-4C Center	Cone	Rock Tip	--			2	1
4-4F Offset	Ring	Cone	--			2	1
4-S Center	Pile Only + Sleeve[2]	Ring	--		1	1	1
6-1C Center	Cone	Rock Tip	--			2	1
6-1F Offset	Pile Only	Ring	Cone		1	2	1
6-2C Center	Ring	Cone	--			2	1
6-2F Offset	Ring	Cone	--			2	1
6-3C Center	Cone	Rock Tip	--			2	1
6-3F Offset	Ring	Cone	--			2	1
6-4C Center	Pile Only	Ring	Cone		1	2	1
6-4F Offset	Pile Only	Ring	Cone		1	2	1
6-S Center	Pile Only + Sleeve	Ring	--		1	1	1
TOTALS				**10**	**7**	**34**	**18**

[1] Pile only consists of only the open steel pile without an end treatment.
[2] Pile only + sleeve consists of an attempt to drive the new test pile as a sleeve over the existing timber piles.
[3] Ring consists of the steel pile fitted with an open-ended cutting shoe.
[4] Cone consists of the steel pile fitted with a conical shoe.
[5] Rock tip consists of the steel pile fitted with a conical rock-breaking tip.

1.4 Noise Emission

1.4.1 In-air Noise

As described above, no construction would occur on land but would occur in the Columbia River from barge-mounted cranes. Test pile installation would result in some airborne noises; however, in-air noise was not a factor in assessing take for in-water activities because the Level B Zone of Influence (ZOI) for underwater noise extends farther. Any marine mammals impacted by in-air noise will be accounted for during the in-water noise assessment and therefore not further assessed in this document.

1.4.2 In-water Noise

Ambient in-water sound in the Proposed Action Area is affected by many factors including: wind and waves from the Pacific Ocean, commercial and recreational vessel use, sounds from resident aquatic animals, nearby landmasses and the ocean floor, currents, etc. A recent study of ambient ocean sound for Oregon's nearshore environment observed maximum and minimum levels of 136 decibels (dB) referenced to a standard pressure level of one micro Pascal (re μPa) and 95 dB re 1 μPa, respectively, with an average level of 113 dB re 1 μPa over a period of one year (Haxel et al. 2011). This level could vary given different recreational and commercial vessels; up to 150 dB for smaller fishing vessels (Hildebrand 2005), up to 186 dB for large vessels, 81 to 166 dB for empty tugs and barges and up to 170 dB for loaded tugs and barges (Richardson et al. 1995) within the frequencies between 20 and 5000 hertz (Hz). Dolphins and toothed whales produce broadband clicks of 125 to 173 dB within frequencies between one kilohertz (KHz) and 200 KHz and humpback whale songs can range between 144 and 174 dB (DOSITS 2012).

Pile driving for test piles may be done with either vibratory or impact hammer, but due to existing enrockment surrounding existing piles, it is anticipated that impact hammer will primarily be used. It is not possible to use bubble curtains or other noise-attenuating devices due to heavy tidal action. Pile driving noise will be intermittent, but could temporarily disturb marine mammals in the proposed project area. Estimated in-water sound levels anticipated from vibratory and impact hammer installation of steel piles are summarized in

Table 2.

Table 2. Estimated Unattenuated Underwater Sound Pressure Levels Associated with Vibratory Pile Driving and Impact Hammer Pile Driving

Pile Type & Activity	Sound Pressure Level (SPL) (single strike)		
24-Inch Steel Pile Installation w/impact hammer[1]	203 dB_{PK}[4]	190 dB_{RMS}[5]	177 dB_{SEL}[6]
24-Inch Steel Pile Installation or Removal w/vibratory[2]	Not Available	161 dB_{RMS}	Not Available
24-Inch Timber Pile Removal w/vibratory[3]	Not Available	152 dB_{RMS}	Not Available

[1] From CalTrans 2015 Table I.2-1. Summary of Near-Source (10-Meter) Unattenuated Sound Pressure Levels for In-Water Pile Driving Using an Impact Hammer: 0.61-meter (24-inch) steel pipe pile in water ~5 meters deep.
[2] From United States Navy. 2015. Prepared by Michael Slater, Naval Surface Warfare Center, Carderock Division, and Sharon Rainsberry, Naval Facilities Engineering Command Northwest. Revised January 2015. Table 2-2.
[3]Due to the lack of information for vibratory removal of 24' diameter timber piles, we use an estimate based on removal of 14-inch timber piles (Greenbusch Group, 2018)
[4]Peak
[5]Root mean squared
[6]Sound exposure level

1.5 Best Management Practices, Mitigation and Impact Minimization Measures

General Best Management Practices (BMPs), mitigation and minimization measures that may be implemented for the project are described in Section 11 of this application.

2.0 Dates and Duration, Specified Geographic Region

2.1 Dates and Duration

The proposed work would occur at the Sand Island pile dikes in Clatsop County, Oregon. The work is anticipated to take between 6 and 41 days with work occurring during standard daylight working hours, 8 to 10 hours per day, beginning on September 15, 2019, pending environmental clearances. If clearances are not obtained by September 15, work would began as soon as possible. For the purposes of take estimates, we assumed that work could occur in either September, October, or November.

2.2 Specified Geographic Region

The Sand Island pile dikes are located near the Mouth of the Columbia River. The pile dike at RM 4.01 is located within Oregon, while the pile dike at RM 6.37 (also referred to as the Chinook pile dike) is in both Oregon and Washington. The MCR is the downstream terminus of a large tidal estuary which is dominated by freshwater inputs from the Columbia and Willamette rivers. This estuary stretches from the mouth upstream to Bonneville Dam at RM 146.

Both pile dikes are located north of the MCR and LCR federal navigation channels (FNCs). The Sand Island pile dike system is one component of a system of structural and operational measures that were authorized to establish and maintain the MCR FNC.

3.0 Marine Mammal Species and Numbers

We identified approximately 26 species that have the potential to occur in waters off the Oregon coast during project construction (

Table 3). Marine mammals are, to varying degrees, susceptible to Level B harassment (i.e., behavioral disturbance or temporary hearing threshold shift) and the more severe Level A harassment (i.e., non-serious injury or permanent threshold shift).

Table 4 outlines the sound thresholds for each marine mammal group. We use this information in Section 4.0 to help assess the potential effects of proposed construction activities on species likely to be encountered in the project vicinity.

The majority of the species listed in

Table 3 are unlikely to occur in the project vicinity. For example, numerous cetaceans (i.e., sei whale (*Balaenoptera borealis borealis),* Risso's dolphin (*Grampus griseus),* common bottlenose dolphin *(Tursiops truncatus truncates),* striped dolphin (*Stenella coeruleoalba),* short-beaked common dolphin *(Delphinus delphis),* short-finned pilot whale (*Globicephala macrorhynchus),* Baird's beaked whale (*Berardius bairdii),* Mesoplodont beacked whale (*Mesoplodon* spp.), Cuvier's beaked whale (*Ziphius cavirostris),* pygmy sperm whale (*Kogia breviceps),* dwarf sperm whale (*Kogia sima),* sperm whale *(Physeter macrocephalus*) are only encountered at the continental slope (>12 miles/20 km offshore) or in deeper waters offshore and are unlikely to be affected by construction activities. Other species may occur closer inshore, but are rare or infrequently encountered off the Oregon coast during the proposed work period of September, October, and November (i.e., minke whale (*Balaenoptera acutorostrata scammoni),* Pacific white-sided dolphin *(Lagenorhynchus obliquidens),* northern right-whale dolphin *(Lissodelphis borealis),* killer whale *(Orcinus orca),* and Dall's porpoise *(Phocoenoides dalli dalli).* Given these considerations and no reasonable expectation for proposed activities to affect the above species, they will not be addressed in Section 4.

Table 3. Marine Mammal Species in the Vicinity of West and East Sand Island

Species and Marine Mammal Group[1]	Estimated Stock(s) Abundance[2]	ESA* Status	MMPA** Status	Frequency of Occurrence[3]	Distribu-tional Range
Phocid pinnipeds					
Harbor seal (*Phoca vitulina richardii*) Oregon and Washington Coast Stock	24,732 (CV= 0.12)	Not listed	Non-strategic	Likely	Continental shelf (coastal and estuarine)
Northern Elephant Seal (*Mirounga angustirostris*) California Breeding Stock	179,000	Not listed	Not depleted; Non-strategic	Infrequent	Continental shelf
Otariid pinnipeds					
Steller sea lion (*Eumetopias jubatus*) Eastern U.S. Stock	16,318 – 23,309 pups; 45,428 – 59,711 non-pups	Not listed	Not depleted; Non-strategic	Seasonal (Sept – May)	Continental shelf
California sea lion (*Zalophus californianus*) U.S. Stock, Pacific Temperate Population	296,750	Not-listed	Not depleted; Non-strategic	Seasonal[4] (Sept – May)	Continental shelf
Low-frequency cetaceans					
Humpback whale (*Megaptera novaeangliae*) California/Oregon/Washington Stock	1,918 (CV ≈ 0.03)	Endangered	Depleted and Strategic	Seasonal	Continental shelf and slope
Fin whale (*Balaenoptera physalus physalus*) California/Oregon/Washington Stock	9,029 (CV = 0.12)	Endangered	Depleted and Strategic	Rare	Continental shelf, slope, and offshore
Gray whale (*Eschrichtius robustus*) Eastern North Pacific Stock	20,990 (CV = 0.05)	Not listed	Non-strategic	Seasonal (Nov - June)	Continental shelf, slope, and offshore
Minke whale (*Balaenoptera acutorostrata scammoni*) California/Oregon/Washington Stock	636 (CV = 0.72)	Not listed	Non-strategic	Rare	Continental shelf
Blue whale (*Balaenoptera musculus musculus*) Eastern North Pacific Stock	1,647 (CV = 0.07)	Endangered	Depleted and Strategic	Seasonal (summer and fall)	Continental slope and offshore
Sei whale (*Balaenoptera borealis borealis*) Eastern North Pacific Stock	519 (CV = 0.40)	Endangered	Depleted and Strategic	Rare	Offshore

Mid-frequency cetaceans					
Pacific white-sided dolphin (*Lagenorhynchus obliquidens*) California/Oregon/Washington, Northern and Southern Stocks	26,814 (CV = 0.28)	Not listed	Non-strategic	Infrequent and seasonal (late spring and summer)	Continental shelf and slope
Risso's dolphin (*Grampus griseus*) California/Oregon/Washington Stock	6,336 (CV = 0.32)	Not listed	Non-strategic	Rare	Continental slope and offshore
Common Bottlenose dolphin (*Tursiops truncatus truncatus*) California/Oregon/Washington Offshore Stock	1,924 (CV = 0.54)	Not listed	Non-strategic	Rare	Offshore
Striped dolphin (*Stenella coeruleoalba*) California/Oregon/Washington Stock	29,211 (CV = 0.20)	Not listed	Non-strategic	Infrequent and seasonal	Generally offshore
Short-beaked Common dolphin, (*Delphinus delphis delphis*) California/Oregon/Washington Stock	969,861 (CV = 0.17)	Not listed	Non-strategic	Rare	Continental slope and offshore
Northern right-whale dolphin (*Lissodelphis borealis*) California/Oregon/Washington Stock	26,556 (CV = 0.44)	Not listed	Non-strategic	Infrequent (late spring and summer)	Continental shelf and slope
Killer whale (*Orcinus orca*), West Coast Transient Stock	180 – 339	Not-listed	Not depleted; Non-strategic	Infrequent	Continental shelf, slope, and offshore
Short-finned pilot whale (*Globicephala macrorhynchus*) California/Oregon/Washington Stock	836 (CV = 0.79)	Not listed	Non-strategic	Rare	Deep waters and continental slopes
Baird's beaked whale (*Berardius bairdii*) California/Oregon/Washington Stock	2,697 (CV = 0.60)	Not listed	Non-strategic	Infrequent (late spring to early fall)	Continental slope
Mesoplodont beaked whale (*Mesoplodon* spp.) California/Oregon/Washington Stock	3,044 (CV = 0.54)	Not listed	Non-strategic	Unknown	Deep waters and continental slopes
Cuvier's beaked whale (*Ziphius cavirostris*) California/Oregon/Washington Stock	3,274 (CV=0.67)	Not listed	Non-strategic	Likely	Deep waters
Pygmy Sperm whale (*Kogia breviceps*) California/Oregon/Washington Stock	4,111 (CV = 1.12)	Not listed	Non-strategic	Rare	Deep waters and continental slopes
Dwarf Sperm whale (*Kogia sima*) California/Oregon/Washington Stock	Unknown	Not listed	Non-strategic	Rare	Deep waters and continental slopes
Sperm whale (*Physeter macrocephalus*) California/Oregon/Washington Stock	1,997 (CV = 0.57)	Endangered	Depleted and Strategic	Seasonal (spring, summer, and fall)	Continental slope and offshore

High-frequency cetaceans					
Harbor porpoise (*Phocoena phocoena*) Northern Oregon/Washington Coast Stock	21,487 (CV = 0.44)	Not listed	Non-strategic	Likely	Continental shelf (coastal and estuarine)
Dall's porpoise (*Phocoenoides dalli dalli*) California/Oregon/Washington Stock	25,750 (CV = 0.45)	Not listed	Non-strategic	Infrequent	Continental shelf, slope, and offshore

[1]Marine Mammal Groups distinguished by cell color as follows:

Phocid pinnipeds (PW)	Otariid pinnipeds (OW)	Low-frequency (LF) cetacean	Mid-frequency (MF) cetacean	High-frequency (HF) cetacean

[2]NOAA/NMFS 2014 and 2018 marine mammal stock assessment reports. These annual stock assessment reports by region are available at https://www.fisheries.noaa.gov/national/marine-mammal-protection/marine-mammal-stock-assessment-reports-region; Stock assessment reports by species (e.g., *E. jubatus*, *O. orca*) are available at https://www.fisheries.noaa.gov/national/marine-mammal-protection/marine-mammal-stock-assessment-reports-species-stock

[3]Frequency defined here in the range of:

- Rare – Few confirmed sightings, or the distribution of the species is near enough to the area that the species could occur there.
- Infrequent – Confirmed, but irregular sightings.
- Likely – Confirmed and regular sightings of the species in the stock area year-round.
- Seasonal – Confirmed and regular sightings of the species in the area on a seasonal basis.
- Unknown – Insufficient data to assess patterns in occurrence

[4]Although the largest influx of California sea lions occurs seasonally, there is some evidence that a few males may remain in Oregon throughout the year (Mate 1973)

* ESA = Endangered Species Act; ** MMPA = Marine Mammal Protection Act

Table 4. Marine Mammal Hearing Groups, Hearing Range, and Level B Disturbance Thresholds* Level B = behavioral disturbance or temporary hearing threshold shift.

Hearing Group	Generalized Hearing Range	In-Air Noise	Underwater Noise	
			Vibratory	Impulse
Low-frequency (LF) cetaceans (baleen whales)	7 Hz – 35 kHz	NA	120 dB	160 dB
Mid-frequency (MF) cetaceans (dolphins, toothed whales, etc.)	150 Hz – 160 kHz	NA	120 dB	160 dB
High-frequency (HF) cetaceans (true porpoises, river dolphins, etc.)	275 Hz – 160 kHz	NA	120 dB	160 dB
Phocid pinnipeds (PW) (true seals)	50 Hz – 86 kHz	90 dB	120 dB	160 dB
Otariid pinnipeds (OW) (sea lions and fur seals)	60 Hz – 39 kHz	100 dB	120 dB	160 dB

*All thresholds reported as the root mean square (RMS) sound pressure level (SPL_{RMS}) and decibels are referenced to 1 micro Pascal (1µPa); Reference: NOAA West Coast Fisheries (online guidance, accessed 03 January 2019) https://www.westcoast.fisheries.noaa.gov/protected_species/marine_mammals/threshold_guidance.html

Table 5. Marine Mammal Hearing Groups and Level A Underwater Injury[1] Thresholds Level A = non-serious injury or permanent threshold shift.

Hearing Group	Vibratory	Impulse
	SEL_{cum}[2]	SEL_{cum}[2]
Low-frequency (LF) cetaceans (baleen whales)	199 dB	183 dB
Mid-frequency (MF) cetaceans (dolphins, toothed whales, etc.)	198 dB	185 dB
High-frequency (HF) cetaceans (true porpoises, river dolphins, etc.)	173 dB	155 dB

Phocid pinnipeds (PW) (true seals)	201 dB	185 dB
Otariid pinnipeds (OW) (sea lions and fur seals)	219 dB	203 dB

[1] Technical Guidance for Assessing the Effects of Anthropogenic Sound on Marine Mammal Hearing (NMFS 2018)
[2] Cumulative sound exposure level (SEL_{cum}) for weighted permanent threshold shift (PTS) onset

4.0 Affected Species Status and Distribution

The species shown in Table 4 occur off the coast of Oregon. Most of those marine mammals would not enter the mouth of the Columbia River and therefore have no potential to be impacted by the Sand Island Test Piles Project. The proposed project would occur between September 15 and November 30; this narrow work window greatly minimizes potential impacts to several marine mammals. Those described here and in Section 4 could be affected by the proposed action described in Section 1.2. All stock estimates were derived from NOAA/NMFS most recent marine mammal stock assessment reports available.

4.1 Cetaceans

4.1.1 Killer Whale

Killer whales (*Orcinus orca*) are found in waters throughout the North Pacific. Along the west coast of North American, 'resident,' transient,' and 'offshore' ecotypes have overlapping distributions and multiple stocks are recognized within that broader classification scheme. According to the most recent stock assessment (NOAA 2017d), the West Coast Transient (WCT) Stock includes animals that range from California to southern Alaska, and is genetically distinct from other transient populations in the region (i.e., Gulf of Alaska, Aleutian Islands, and Bering Sea transients and AT1 transients).

There are an estimated 243 killer whales in the WCT Stock, excluding animals from the 'outer coast.' This estimate is considered conservative because it also excludes animals from California that have not been catalogued in recent years (NOAA 2017c). Overall, the population appears to be increasing, potentially corresponding in greater prey abundance (Houghton et al. 2015a). Killer whales are subject to injury from ship strikes and vessel noise that may interfere with echolocation (Veirs et al. 2016). Vessel speed has been shown as one of the best predictors of sound levels received by killer whales and adherence to speed limits may ultimately reduce the level of disturbance to the species (Houghton et al. 2015b). While not regularly seen in the project area, transient killer whales have

been observed near the mouth of the Columbia River during the peak spring Chinook salmon migration in March and April. Southern resident killer whales have not been document in the Columbia River or near the MCR.

4.1.2 Humpback Whale

The estimated population of the humpback whale (*Megaptera novaeangliae*) California/Oregon/Washington stock is about 1,918 animals (NOAA 2017). Sources of human-caused mortality and injury include pot/trap and gillnet fisheries, vessel strikes, entanglements, and marine debris. The entire species was previously listed as "endangered" under Endangered Species Act (ESA) due to historical commercial whaling practices that decimated populations. The stock is now managed as three Distinct Population Segments (DPS) units and humpback whales in the Mexican and Central American DPSs are currently listed "threatened" and "endangered", respectively, under ESA. As such, the California/Washington/Oregon Stock is currently considered "endangered," "depleted," and "strategic" under Marine Mammal Protection Act (MMPA) (NOAA 2017).

Humpback whales migrate long distances between winter breeding areas and summer feeding areas. Humpback whales in the North Pacific have several populations distinguished by their winter breeding areas (Calambokidis et al. 2000). Whales found off the coast of Oregon comprise the California/Washington/Oregon Stock that may include animals from the California-Oregon and Washington-southern British Columbia feeding groups (NMFS 2017). These animals belong almost exclusively to the Mexican and Central American DPSs. Humpback whales are primarily found on the continental shelf and slope (Adams et al. 2014). Humpback whales are typically seen off the Oregon coast from April to October, with peak numbers from June through August. Humpback whales were observed near Heceta Bank (i.e., 15 to 30 miles off the Oregon coast in Lincoln and Lane counties) in June 1990 (Green et al. 1991).

Humpback whales have recently begun utilizing the MCR as foraging ground. They have been observed frequenting the immediate vicinity of West and East Sand Islands in 2015 and 2016 (The Columbian, 2016). They were also observed in the area in 2017 but there was not a heavy presence in 2018. Humpbacks have been arriving in the lower Columbia estuary as early as mid-June and have been observed as late as mid-November with a peak of abundance coinciding with the peak abundance of forage fish in mid-summer. Based on this information, it is possible that humpback whales may pass through and may forage intermittently in the immediate project vicinity, though there is a lower risk of whale presence in September, October, and November.

4.1.3 Gray Whale

Gray whales (*Eschrichtius robustus*) in the North Pacific have two distinct population stocks, Eastern North Pacific (ENP) and Western North Pacific. During summer and fall, gray whales in the ENP migrate from breeding grounds off the coast of Baja California and Mexico to feeding areas in the Bering Seas. Approximately 200 of the aforementioned migrating whales feed between

northern California and northern British Columbia (Sumich 1984, NOAA 2014). Whales seen along the Oregon coastline are typically part of this Pacific Coast Feeding Group (PCFG) and their abundance and residence time in Oregon may correlate with the availability of mysids (*Holmesimysis sculpta*), a major prey item (Newell and Cowles 2006).

The best available abundance estimate for ENP gray whales is 20,990, as of the 2010/2011 southbound survey (NOAA 2014). Though not currently managed as a separate stock, the estimated number of gray whales in the PCFG is approximately 209 (CV=0.07) animals. Gray whales in the ENP seem to have increased over the last few decades, in spite of an unusual mortality event (UME) in 1999/2000. Entanglement, ship strikes, and habitat change are ongoing concerns for the population, but the current level of human-caused mortality is still well below the potential biological removal (PBR) for the stock. ENP gray whales are not currently listed under ESA and are not considered a "strategic" stock under the MMPA (NOAA 2014).

Gray whales are generally not known to enter the MCR. There are a few observations from 1989 and 1990 just north of the Long Beach Peninsula (OBIS http://seamap.env.duke.edu/species/180521 (accessed 1/18/2019)). Gray whales migrate along the Oregon coast in three discernible phases from early December through May (Herzing and Mate 1984); therefore, animals would not be expected to be found near the MCR in September, October, or November.

4.1.4 Harbor Porpoise

For the Northern Oregon/Washington Coast stock (Lincoln City, OR, to Cape Flattery, WA) of harbor porpoises (*Phocoena phocoena)*, the corrected estimate of abundance in the coastal waters in 2010-2011 was 21,487 (CV = 0.44) (Forney et al. 2013 cited in NOAA 2014b) and is currently estimated at 35,769 (NOAA 20107).

Harbor porpoise are known to occur year-round in the inland transboundary waters of Washington and British Columbia, Canada (Osborne et al. 1988 cited in NOAA 2014b) and along the Oregon/Washington coast (Barlow 1988, Barlow et al. 1988, Green et al. 1992 cited in NOAA 2014b). Aerial survey data from coastal Oregon and Washington, collected during all seasons, suggest that harbor porpoise distribution varies by depth (Green et al. 1992 cited in NOAA 2014b). Although distinct seasonal changes in abundance along the west coast have been noted and attributed to possible shifts in distribution to deeper offshore waters during late winter (Dohl et al. 1983, Barlow 1988 cited in NOAA 2014b), seasonal movement patterns are not fully understood.

Harbor porpoises are usually found in shallow water, most often nearshore, although they occasionally travel over deeper offshore waters (NOAA 2013a). West Coast populations have more restricted movements and do not migrate as much as East Coast populations (Halpin, OBIS-SEAMAP 2019). Most harbor porpoise groups are small, generally consisting of less than five or six individuals, though for feeding or migration they may aggregate into large, loose groups of 50 to several hundred animals (Halpin,

OBIS-SEAMAP 2019). Behavior tends to be inconspicuous, compared to most dolphins, and they feed by seizing prey which consists of wide variety of fish and cephalopods ranging from benthic or demersal (Halpern, OBIS-SEAMAP 2019).

Harbor porpoises are sighted year round in the MCR (Griffith 2015). Their abundance peaks with the abundance of anchovy presence in the river and nearshore. The Corps does not have good information on their presence in the immediate work area during the fall, but their presence is assumed.

4.2 Pinnipeds

The following tables (

Table 6) show the average number of pinnipeds found at South Jetty, which is approximately four miles southwest of West and East Sand Island for 2000-2014.

Table 6. Average Number of Pinnipeds per Month on South Jetty, 2000-2014 (WDFW)

Month	# of Times Surveyed in Month	Avg. Number of Steller Sea Lions	# of Times Surveyed in Month	Avg. Number of California Sea Lions	# of Times Surveyed in Month	Avg. Number of Harbor Seals
January	1	249	2	10	0	--
February	6	259 (*)	7	28	1	1
March	6	177	4	17	2	14
April	8	587	7	99	0	--
May	6	824	6	125	0	--
June	18	676	14	202	7	57
July	10	358	2	1	0	--
August	4	324	4	115	2	1
September	2	209	2	249	0	--
October	6	384	6	508 (***)	0	--
November	3	1,663	3	1,214 (**)	0	--
December	1	1,112	1	725	1	57
Totals	71	6,822	58	3,293	13	130

(*) 2012 may be an anomaly with only 1 sighting.
(**) Driven by 2011 counts, which could be an anomaly.
(***) Appears to be driven by high numbers in 2006.
Source: Data from Washington Department of Fish and Wildlife 2014.

4.2.1 Steller Sea Lion

Large numbers of Steller sea lions (*Eumetopias jubatus*) use the nearby South Jetty for hauling out (Jeffries 2000) and are present, in varying abundances, all year (

Table 6). Abundance is typically lower as the summer progresses when adults are at the breeding rookeries. Steller sea lions are most abundant in the vicinity during the winter months and tend to disperse elsewhere to rookeries during breeding season between May and July (Corps 2007). All population age classes, and both males and females, use the South Jetty to haul out. Only non-breeding individuals are typically found on the jetty during May-July, and a greater percentage of juveniles are present. There is probably a lot of turnover in sea lion numbers using the jetty. That is, the 100 or so sea lions hauled out one week might not be the same individuals hauled out the following week.

California sea lions also use this area and can intermingle with Steller sea lions. Steller sea lions appear to out-compete California sea lions for the preferred haul out area. Previous monthly averages between 1995 and 2004 for Steller sea lions hauled-out at the South Jetty head ranged from about 168 to 1,106 animals. Data from Oregon Department of Fish and Wildlife (ODFW) from 2000-2014 reflects a lower frequency of surveys, and numbers ranged from zero animals to 606 Steller sea lions (ODFW 2014). More frequent surveys by Washington Department of Fish and Wildlife (WDFW) for the same time frame (2000-2014) put the monthly range at 177 to 1,663 animals throughout the year.

4.2.2 California Sea Lion

Large numbers of California sea lions (*Zalophus californianus*) use the nearby South Jetty for hauling out (Jeffries 2000). The population size of the U.S. stock of California sea lions is estimated at 296,750 animals (NOAA 2014). According to ODFW (2014) most counts of California sea lions are also concentrated near the tip of the South Jetty. ODFW survey information (2007 and 2014) indicates that California sea lions are relatively less prevalent in the Pacific Northwest during June and July, though in the months just before and after their absence there can be several hundred using the South Jetty. More frequent WDFW surveys (2014) indicate greater numbers in the summer, and use remains concentrated to fall and winter months. Nearly all California sea lions in the Pacific Northwest are sub-adult and adult males (females and young generally stay in California).

4.2.3 Harbor Seal

Harbor seals (*Phoca vitulina richardii*) are one of the most abundant pinnipeds in Oregon and can typically be found in coastal marine and estuarine waters of the Oregon coast throughout the year. On land, they can be found on offshore rocks and islands, along shore, and on exposed flats in the estuary (Harvey 1987). In 2002, the estimated absolute abundance of harbor seals on the Oregon coast (excluding Hunters Island) was 10,087 (8,445-12,046 95% CI) animals (Brown et al. 2005). Harbor seals are known to use the Chinook Channel/Baker Bay area during low tides for hauling out (Jeffries 2000).

Harbor seals are generally non-migratory, but local movements may vary with tides, weather, seasons, food resources, and reproductive behavior (NOAA 2013). They were historically hunted in Oregon as a nuisance to fishermen, however, their numbers have steadily increased since the passage of the MMPA in 1972 (Harvey 1987, Brown et al. 2005). While harbor seals are still subject to incidental take from commercial fisheries in the region, the overall mortality is relatively small and the Oregon/Washington Coast stock of harbor seals is not depleted under MMPA or listed under ESA (NOAA 2013).

5.0 Type of Incidental Take Authorization Requested

Under the MMPA, NMFS has defined levels of harassment for marine mammals. Level A harassment is defined as, "Any act of pursuit, torment, or annoyance which has the potential to injure a marine mammal or marine mammal stock in the wild." Level B harassment is defined as, "Any act of pursuit, torment, or annoyance which has the potential to disturb a marine mammal or marine mammal stock in the wild by causing disruption of behavioral patterns, including, but not limited to, migration, breathing, nursing, breeding, feeding, or sheltering." Under Section 101(a)(5)(D) of the MMPA, the Corps requests an Incidental Harassment Authorization for small numbers of marine mammals that may be affected by the Sand Island Test Piles project as described in Sections 1 and 2 above. The in-water effects of pile driving noise could include potential Level A and Level B effects on marine mammals.

5.1 Permanent Threshold Shift Isopleths

We utilized the NMFS technical guidance and tool for estimating Level A permanent threshold shift (PTS) isopleths, the area within which auditory damage could occur, calculated separately for each marine mammal hearing group (NMFS 2018). The estimated isopleth distances were calculated using the un-weighted Sound Pressure Levels (SPL) Root Mean Squared (RMS) values from

Table 2, with the following assumptions:

- In a 24-hour period, no more than 6 piles would be installed/removed using either an impact or vibratory hammer.
- The average number of strikes per pile with an impact hammer is 550.
- The average duration to install a single 24-inch pile with an impact hammer is 60 minutes and with vibratory is 30 minutes.
- Vibratory removal of steel piles is assumed to generate the same SPLs as vibratory installation of steel piles, but for a shorter duration (i.e., 5 minutes instead of 30 minutes).
- Vibratory removal of timber piles generates average sound levels of 152 SPL and it will take approximately 5 minutes to remove each pile.
- Up to 9 piles (steel or timber) may be removed in a single day

The spreadsheet calculations associated with PTS values presented in

Table 7 are provided in Appendix A, with corresponding figures in Appendix B.

5.2 Level B Disturbance

We used the following practical spreading loss equation to calculate the Level B disturbance distances in water (i.e., Equation 1):

$$D_{thresh-water} = D_0 * 10^{\left(\frac{SPL\ Estimate\ in\ dB_{RMS\ or\ Leq} - Disturbance\ threshold\ in\ dB}{\alpha}\right)}$$

With $D_{thresh\text{-}water}$ calculated distance from source to reach in-water threshold values, D_0 reference measurement distance (10 meters), water disturbance threshold values from

Table 4, and α = 15. Estimated sound pressure levels in water were referenced from

Table 2, using the dB_{RMS} values for installing 24-inch steel piles with a vibratory hammer and 24-inch piles with an impact hammer. Figures in Appendix B show marine mammal Level B disturbance zones associated with the two types of pile driving activity (i.e., impact and vibratory).

Table 7. Level A PTS and Level B Disturbance Isopleths Marine Mammals

Noise Generation Type	**Level A** Permanent Threshold Shift (PTS) Isopleth Distance[1] (meters)					**Level B Disturbance**[2] All Groups	
	LF Cetacean	MF Cetacean	HF Cetacean	Phocid Pinniped	Otariid Pinniped	Isopleth Distance (m)	Isopleth Area (km^2) ZOI
24" Steel Pipe Pile Impact Installation	881.2	31.3	1,049.7	471.6*	34.3	1,000	3-4
24" Steel Pipe Driving Vibratory	14.2	1.3	21.0	8.6	0.6	5,412	64-73
24" Steel Pipe Removal Vibratory	5.6	0.5	8.3	3.4	0.2	5,412	64-73
24" Timber Pile Removal Vibratory	1.4	0.1	2.1	0.9	0.1	1,359	0.6-0.7

[1] Calculated using NMFS technical tool and spreadsheet for estimating PTS levels associated with unattenuated pile driving (NMFS 2018) (see Appendix A).
[2] Estimated using Equation 1 and values referenced in text, then using the estimated distance to calculate an approximate area for each isopleth. The lower limit represents the isopleth area for the pile dike at RM 4.01, which has a slightly smaller area due to land impedances. The upper limit of the range is the calculated isopleth area for the pile dike at RM 6.37.
*Associated Level A isopleth areas are approximately 0.8 km^2 (RM 4.01) or 0.9 km^2 (RM 6.37) and were used to inform harbor seal take estimates in Table 10.

6.0 Take Estimates for Marine Mammals

As described in Section 1.3, no construction would occur on land but would occur in the Columbia River from barge-mounted cranes. Test pile installation would result in some airborne noises; however, in-air noise was not a factor in assessing take for in-water activities because the Level B ZOI for underwater noise extends farther and would have greater impacts than in-air noise.

6.1 Marine Mammal Abundances in Project Area

6.1.1 Cetacean Abundances

Marine mammal counts specific to the MCR were sparse. Thus, we compiled available data in order to estimate abundances. Ancillary data may result in over-estimation of the density of animals likely to be encountered in the direct project vicinity and thus the request take quantities are likely higher than the actual take that may be attributed to proposed project activities.

Killer whale

Killer whales are mostly migratory in the vicinity of the MCR, generally are not found close to shore, and are highly mobile. Killer whales were not detected in fall and winter aerial surveys off the Oregon coast documented in Adams et al. 2014. Aerial seabird marine mammal surveys observed zero killer whales in January 2011, zero in February 2012, and ten in September 2012 within an approximately 1,500 km^2 range near the MCR (Adams 2014). It is assumed that these were southern resident killer whales, which have not been documented near the project area. Due to the absence of killer whales observations in the project vicinity, the limited timeframe of proposed pile driving activities it is highly unlikely that any killer whales would be near the MCR during the proposed work period and therefore abundance for this project is assumed to be zero.

Humpback whale

Humpback whales have been observed in the immediate vicinity of the project area in recent years. Humpbacks have been arriving in the lower Columbia estuary as early as mid-June and have been observed as late as mid-November with a peak of abundance coinciding with the peak abundance of forage fish in mid-summer. No surveys were located for the project area, but it is assumed that they could be present during pile driving activities.

Gray whale

Gray whales have not been documented near the project area and are not known to enter the MCR. In addition, gray whales migrate along the Oregon coast in three discernible phases from early December through May (Herzing and Mate 1984). Therefore, they are unlikely to occur near the project area in September, October, or November and no take is requested.

Harbor porpoise

Harbor porpoises are regularly observed in the oceanward waters adjacent to the project area and are known to occur year-round. Their nearshore abundance peaks with anchovy presence, which is generally June through October. There was one recorded sighting of a harbor porpoise in the project area east of the jetties in the Sept-Nov timeframe (OBIS-SEAMAP 2019). Therefore it is feasible that animals could be present during pile driving activities. The Corps does not have (nor is aware of) data for the number of harbor porpoises that may be present in the project vicinity. The closest derived estimates of inshore density (3.642 animals/km^2) are for the entire Northern California and Southern Oregon Stock (Barlow et al. 2009), and likely overestimate the number of animals that may occur near the mouth of the Columbia River. Given these constraints, we used the monitoring data associated with the IHA/LOA for Columbia River jetty repairs (USACE 2016) to inform estimates in this document. Over the course of a 5-day monitoring period, observers detected 5 harbor porpoises (Grette Associates 2016). Based on this information, we estimated a harbor porpoise encounter rate of one per day within the ZOI to calculate Level A and Level B take.

6.1.2 Pinniped Abundances

For Steller sea lions, California sea lions, and harbor seals, the numbers of individuals were taken from WDFW's surveys during 2000-2014 at the South Jetty for the months of September, October, and November (

Table 6) and averaged to get an average daily count (Table 8). For Steller sea lions, the three month total of average individuals observed was 2,256. For California sea lions the average individuals observed was 1,971. For harbor seals no surveys were done for September or October so the number of individuals assumed was for the month of November only, which was 57. While animals were surveyed at the prominent haul out site along the South Jetty, we assume each of these estimates represent the total number of individuals present in the project vicinity.

Table 8. Pinniped Abundance Estimates from the South Jetty.

	Abundance Estimates (WDFW Average Observations 2000-2014)		
	Steller Sea Lions	**California Sea Lions**	**Harbor Seals**
September	209	249	Not surveyed
October	384	508	Not surveyed
November	1,663	1,214	57
Total	**752**	**657**	**57**

6.2 Incidental Take

Level A permanent threshold shift isopleths and Level B disturbance thresholds were calculated for all species considered (

Table 7; calculations in Appendix A). Some of the marine mammals found in the MCR have large PTS isopleths because it is not possible to use bubble curtains or other noise-attenuating devices due to heavy tidal action in the project area (see Appendix B figures for each pile dike). During impact hammer use, the Level A isopleths range from approximately 34 meters for otariid pinnipeds to 1050 meters for HF cetaceans. During vibratory use the Level A isopleths are from 1 meter (otariid pinnipeds) to 21 meters (HF cetaceans). Table 10 summarizes the request for incidental take due to noise impacts associated with impact pile driving activities, along with the percentage of the stock affected.

Shutdown zones will be enforced to avoid Level A auditory impacts for most species (i.e., most cetaceans and all otariid pinnipeds). Shutdown Zones will be monitored by trained marine mammal spotters that will enforce shutdown zones based upon marine mammal hearing groups during all impact hammer pile driving (

Table 7). If the spotter cannot identify a marine mammal to the species level, they will enforce shutdown zones equal to the largest Level A isopleth.

For harbor seals and harbor porpoises, Level A take is requested at the levels specified in Table 10. Marine mammal spotters will monitor the Level A PTS zones during all driving activities and record "take" as outlined in Section 13 of this document.

6.2.1 Take Estimates for Cetaceans

In the absence of more specific marine mammal survey data at our project location, we are defining the "project vicinity" equal to the Level B disturbance isopleth.

Killer whale

The maximum PTS isopleth distance for killer whales (MF cetacean) is 41 meters. It is rare that killer whales are observed in the coastal waters near the MCR and it is even more unlikely that they would enter the river and be seen near Sand Island in September, October, or November. The assumed abundance for killer whales for this project is zero; therefore, no Level A or B Take is being requested.

Humpback whale

The maximum PTS isopleth distance for humpback whales (LF cetacean) is 881 meters. No Level A Take or Level B Take is being requested because work would cease if any humpback whales were to come within 881 meters (Level A PTS isopleth) of the project. Though the isopleth is large, the humpback whale's large size and distinct behavior make them relatively easy to spot by a qualified biologist. Soft start procedures for resuming construction will be implemented once the work area has been cleared to further eliminate risks.

Gray whale

The maximum PTS isopleth distance for gray whales (LF cetacean) is 881 meters. No Level A or Level B take is requested and work will cease if any gray whales are detected in the Level A PTS or Level B disturbance zone.

Harbor porpoise

The maximum PTS isopleth distance for harbor porpoises (HF cetacean) was ~1,050 meters. We assume one animal per day could be sighted, and roughly 50% of animals detected could enter the Level A zone during the 20 workdays of impact pile driving. Based on these assumptions, we have requested Level A take of 10 harbor porpoises. We are also requesting Level B take of one harbor porpoise per day (21 animals total) during vibratory pile removal/installation. The latter take assumes that harbor porpoises that enter the Level B zone during the 18 days (maximum) when work could include a combination of impact and vibratory driving, would not remain in the area and be subject to Level A take.

6.2.2 Take Estimates for Pinnipeds

Take calculations for pinnipeds are estimated using abundance estimates from the South Jetty, which is approximately four miles to the south of Sand Island. In order to estimate take, the average number of animals seen for the months of September, October, and November was used a basis for overall animal abundance. We assumed animals counted at the South Jetty comprised the majority of pinnipeds present in the Lower Columbia River west of Interstate 101 between September and November. This total area, including the jetties, was roughly 275 km^2. We calculated the density of each pinniped species per km^2, then multiplied by the ZOI and the number of workdays anticipated at each pile dike (Table 9). These estimates likely represent take of the same individuals throughout the construction period. Therefore, the actual percentages of stocks taken is less than values presented in

Table 10.

Table 9. Level B Take Calculations for Marine Mammals.

	Stellar Sea Lions RM 4.01	**Stellar Sea Lions RM 6.37**	**California Sea Lions RM 4.01**	**California Sea Lions RM 6.37**	**Harbor Seals RM 4.01**	**Harbor Seals RM 6.37**	**Harbor Porpoises* RM 4.01**	**Harbor Porpoises RM 6.37**
Average survey count	752	752	657	657	57	57	---	---
Approximate animal density (per km^2)	2.73	2.73	2.39	2.39	0.21	0.21	---	---
Animals subject to Level B ZOI** Vibratory timber pile removal	2	3	2	3	0	0	---	---
Animals subject to Level B ZOI Vibratory steel pile removal/driving	1,572	1,794	1,377	1,570	121	138	---	---
Animals subject to Level B ZOI Impact driving	82	109	72	96	6	5	---	---
Estimated combined take over 41 workdays[#]	1,657	1,906	1,450	1,668	127	143	10	11

*Take estimates based on an assumed one harbor porpoise per day (21 total) would be subject to the Level B ZOI during vibratory pile driving/removal.
**Estimated based on the Level B ZOIs for the type of pile driving/removal indicated (Table 8). For days when a combination of driving could occur, the Level B take is based on the largest isopleth.
[#]Per Section 1.3, take estimates assume a maximum of 3 workdays for vibratory timber pile removal (only); 18 workdays to include impact driving AND vibratory driving/removal of steel piles; and 20 workdays using impact hammers only. Calculations assume that workdays will be equally split between the two pile dike locations, with no overlapping driving/removal activities between locations.

Table 10. Level A and Level B Take Estimates for the Sand Island Pile Dikes Test Piles.

Species	Level A Take*	Level B Take	Stock Abundance	Percentage of Stock Taken Level A	Percentage of Stock Taken Level B
Humpback whale (*Megaptera novaeangliae*)	0	0	1,918	0	0
Killer whale (*Orcinus orca*)	0	0	243	0	0
Harbor porpoise (*Phocoena phocoena*)	10**	21	21,487	<1%	<1%
Gray whale *(Eschrichtius robustus)*	0	0	20,990	<1%	<1%
California Sea Lion (*Zalophus. californianus*)	0	3,119	296,750	0	1.1%
Stellar Sea Lion (*Eumetopias jubatus*)	0	3,563	61,746	0	5.8%
Harbor Seal (*Phoca vitulina richardii*)	3	270	24,732	<1%	1.1%

*Calculated using the area of Level A isopleth(s) of HF cetaceans and phocid pinnipeds, for harbor porpoises and seals, respectively (see Table 7 footnote). For harbor seals, the area of the 100-meter shutdown zone (0.072 and 0.085 km^2 for RM 4.01 and 6.37, respectively) was subtracted before calculating Level A and Level B take. All estimates assume impact driving ONLY could occur up to 20 of the 41 workdays, and one harbor porpoise per day, and 0.21 harbor seals per square kilometer per day, could be subject to take (see Table 9).
**Given that harbor porpoise abundance estimates were based on sightings, we assume that roughly 50% of the animals that could be subject to take during impact driving would actually be observed entering the PTS zone and request take at this level.

7.0 Anticipated Impact of the Activity

The proposed work may cause permanent damage to harbor porpoises that enter the project area. Adhering to the marine mammal monitoring protocols described in Section 13 will help ensure that there are no Level A auditory damages to other marine mammal species that could transit the area during installation of test piles.

Marine mammals that enter the Level B ZOI may experience temporary disturbance. The effects are limited to the species listed in

Table 10 and should not exceed the 41 days of work expected to install test piles at two locations. Marine mammal behavioral responses could include avoidance or altered foraging patterns, though these changes would likely be temporary and last only through the duration of the test piles. Level B harassment take will be greatest for pinniped populations experiencing underwater noise exposure. However, overall project impacts have a negligible effect on marine mammal stocks in the area, as estimated take will affect less than 1% of the stock for most species, and approximately 6% of the Stellar sea lion stock.

8.0 Anticipated Impacts on Subsistence Uses

There are no relevant subsistence uses of marine mammals implicated by this action.

9.0 Anticipated Impacts on Habitat

Test piles would be driven in the same location as currently existing pile dikes. Though some marine mammals may pass through the area, the pile dikes are not known to be used as breeding, feeding, sheltering, or foraging specifically for any marine mammals; therefore, no modification to existing habitat is expected.

10.0 Anticipated Effects of Habitat Impacts on Marine Mammals

The proposed project would not result in a permanent adverse impact to marine mammal habitat.

11.0 Mitigation Measures to Protect Marine Mammals and Their Habitat

The following mitigation measures will be implemented during construction activities to minimize disturbance during pile removal and installation activities.

- The contractor will implement a soft-start procedure for impact pile driving activities. The objective of a soft-start is to provide a warning and/or give animals in close proximity to pile driving a chance to leave the area prior to an impact driver operating at full capacity thereby, exposing fewer animals to loud underwater and airborne sounds. A soft start procedure will be used at the beginning of each day that pile installation activities are conducted.
    - For impact driving, an initial set of three strikes would be made by the hammer at 40 percent energy, followed by a one minute wait period, then two subsequent three-strike sets at 40 percent energy, with one minute waiting periods, before initiating continuous driving.
- Monitoring of marine mammals will take place starting 30 minutes before construction begins until 30 minutes after construction ends (see Section 13 for monitoring details).

- Before commencement of pile driving activities, the Corps will establish zones for each marine mammal group as shown in Isopleth Figures (Appendix B) for Level A Shutdown Zones to prevent auditory injury.
- For in-water heavy machinery work other than pile driving (using, e.g., standard barges, tug boats, barge-mounted excavators, or clamshell equipment used to place or remove material), if a marine mammal comes within 25 meters, operations shall cease and vessels shall reduce speed to the minimum level required to maintain steerage and safe working conditions.
- Prior to initiating in-water pile driving or pile removal, the Corps will establish the following Level B ZOIs for underwater noise.
    - The Level B ZOI for impact and vibratory pile driving activities will be established out to a line of sight distance of up to 1,000 meters, 1,359 meters, or 5,412 meters, based on the type of driving activity (Table 7).
    - If a marine mammal enters the Level B ZOI, but does not enter Level A Exclusion Zone, a "take" will be recorded and the work will be allowed to proceed without cessation. Marine mammal behavior will be monitored and documented.
- Construction waste material used or stored will be confined, removed, and disposed of properly.
- A description of spill containment and control procedures will be on-site.
- Fueling and lubrication of equipment will be conducted in a manner that affords the maximum protection against spill and evaporation. Fuel, lubricants and oil will be managed and stored in accordance with all Federal, State, Regional, and local laws and regulations. BMPs will be employed in order to prevent petroleum products, chemicals, or other deleterious waste materials from entering waters. Fuel hoses, oil drums, oil or fuel transfer valves and fittings, etc., will undergo frequent inspection for drips or leaks, and shall be maintained in order to prevent spills into waters.
- The contractor will be provided, and will strictly adhere to the marine mammal monitoring plan (Section 13 below).

12.0 Mitigation Measures to Protect Subsistence Uses

The proposed project will take place in the Columbia River at West and East Sand Island, as well as open water east of East Sand Island in Oregon. No activities will take place in or near a traditional Arctic hunting place.

13.0 Monitoring and Reporting

Impacts to marine mammals are likely to be temporary and negligible, and the mitigation measures described in Section 11 are meant to avoid and minimize impacts to any marine mammals that may be present to the maximum extent practicable. The following Monitoring and Reporting measures will be implemented to further minimize disturbance to marine mammals, improve understanding of the level of taking or impacts on populations of marine mammals that are expected to be present while conducting activities, and increase the general knowledge about these marine mammals and the effectiveness of the mitigation measures.

The Corps proposes the following monitoring protocols:

- Visual monitoring will be conducted by qualified, trained marine mammal observers (hereafter "observer") and will be implemented during all pile removal/installation activities. An observer shall have prior training and experience conducting marine mammal monitoring or surveys, and who has the ability to identify marine mammal species and describe relevant behaviors that may occur in proximity to in-water construction activities.
- If conditions are such that they restrict the observer's ability to make observations within the injury protection zone, such as due to excessive wind or fog, pile installation will cease until conditions allow the resumption of monitoring.
- For all pile driving activities, a shutdown and disturbance zone will be monitored.
    - A minimum of two observers will be employed during all driving and removal activities, though more observers may be necessary to adequately monitor marine mammals during periods of low or obstructed visibility to ensure the entirety of the shutdown zone is monitored. One of the required observers will conduct monitoring via boat to count marine mammals entering the Level B disturbance zones and alert construction crew members of marine mammals entering the Level B zone and approaching/entering the Level A zone.
    - Monitoring will take place from 30 minutes prior to initiation through 30 minutes post-completion of pile driving.
    - Impact Pile Driving:
        - The shutdown zone will be equal to areas where the underwater SPLs are anticipated to equal or exceed the Level A (injury), except for harbor seals. The shutdown zone will always be a minimum of 25 meters (82 feet) to minimize Level A take and prevent injury from physical interaction of marine mammals with construction equipment. During impact hammer use, the Level A isopleth is approximately 34 meters for otariids (e.g., Stellar and California sea lions), 881 meters for LF cetaceans (e.g., humpback and gray whales), and 1,050 meters for HF cetaceans (e.g., harbor porpoises). For the above species, the shutdown zones shall be equal to the Level A isopleths. For harbor seals, the shutdown zone shall be 100 meters.
            - Given the difficulty detecting harbor porpoises, this IHA would allow for Level A Take of up to 10 individuals and Level B Take of up to an additional 21 animals (over the project duration). Should harbor porpoises be observed entering the Level A zone, those individuals would be counted but work would not be required to cease unless the project had already reached the maximum Level A Take authorized by this IHA (i.e., 10 individuals) or individuals were approaching the 10-meter shutdown zone.
            - We are also requesting Level A take of 3 harbor seals that may enter the Level A PTS isopleth (i.e., 472 meters) undetected before reaching the 100-meter shutdown zone.
    - Vibratory Pile Driving:

    - The shutdown zone will include all areas where the underwater SPLs are anticipated to equal or exceed the Level A (injury). The shutdown zone will always be a minimum of 25 meters (82 feet), thus avoiding Level A take during vibratory driving and removal of piles. Level A isopleths for all marine mammals are less than the minimum 25-meter shutdown zone.

- Observers will be placed at the best vantage points practicable (from the construction barges or by boat) to monitor for marine mammals and implement shutdown/delay procedures when applicable by calling for the shutdown to the hammer operator.
- If waters exceed a sea-state which restricts the observers' ability to make boat-based observations for the full Level A shutdown zone (e.g., excessive wind, wave action, or fog), impact pile installation will cease until conditions allow monitoring to resume. Contractors should ensure compliance with NOAA advisories for safe boat operations based on the size of vessel to be used by the marine mammal observer.
- Prior to the start of pile driving, the shutdown zone will be monitored for 30 minutes to ensure that the shutdown zone is clear of marine mammals. Pile driving will only commence once observers have declared the shutdown zones clear of marine mammals.
- If a marine mammal is observed in the Level B disturbance zone, but not approaching or entering the shutdown zone, a "take" will be recorded and the work will be allowed to proceed without cessation. Marine mammal behavior will be monitored and documented.
- If a marine mammal approaches or enters a shutdown zone during pile driving, work will be halted and delayed until either the animal has voluntarily left and been visually confirmed beyond the shutdown zone or 15 minutes have passed without re-detection of the animal.
- The observer will use a hand-held or boat-mounted GPS device or rangefinder to verify the required monitoring distance from the project site.
- The waters will be scanned using binoculars (10x42 or similar) or spotting scopes (20-60 zoom or equivalent), and by making visual observations.
- If marine mammal species for which take is not authorized, such as killer whales or other cetaceans, are observed within the area of potential sound effects during or 30 minutes before pile driving, the observer(s) will immediately notify the on-site supervisor or inspector, and require that pile driving either not initiate or temporarily cease until the animals have moved outside of the area of potential sound effects.
- Pile driving will be conducted only during daylight hours from sunrise to sunset when it is possible to visually monitor marine mammals.
- A marine mammal observation sheet will be used to record information about marine mammals observed (see NMFS minimum requirements below).
- If any dead or dying marine mammal species are observed in the action area, regardless of known cause, the following measures will be taken:
    - Record the species type (if known), date, time, and location of the observation
    - Take a photograph of the specimen
    - Immediately notify NOAA Fisheries.

NMFS requires that at a minimum, the following information be collected on the sighting forms.

- Date and time that pile removal and/or installation begins and ends.
- Construction activities occurring during each observation period.
- Weather parameters (e.g., percent cover, visibility).
- Water conditions [e.g., sea state, tidal state (incoming, outgoing, slack, low, and high)].
- Species, numbers, and, if possible, sex and age class of marine mammals.
- Marine mammal behavior patterns observed, including bearing and direction of travel, and, if possible, the correlation to SPLs.
- Distance from pile removal and/or installation activities to marine mammals and distance from the marine mammal to the observation point.
- Locations of all marine mammal observations.
- Other human activity in the area.

The Corps will note behavioral observations, to the extent practicable, if an animal has remained in the area during construction activities. Therefore, it may be possible to identify if the same animal or a different individuals are being taken. Collected data will be compiled following the end of the project and submitted to NMFS.

According to NMFS Requirements, the Corps will include the following minimum qualifications for marine mammal observers:

- Visual acuity in both eyes (correction is permissible) sufficient to discern moving targets at the water's surface with ability to estimate target size and distance. Use of binoculars or spotting scope may be necessary to correctly identify the target.
- Advanced education in biological science, wildlife management, mammalogy or related fields (Bachelor’s degree or higher is preferred).
- Experience and ability to conduct field observations and collect data according to assigned protocols (this may include academic experience).
- Experience or training in the field identification of marine mammals (cetaceans and pinnipeds).
- Sufficient training, orientation or experience with vessel operation and pile driving operations to provide for personal safety during observations.
- Writing skills sufficient to prepare a report of observations. Reports should include such information as number, type, and location of marine mammals observed; behavior of marine mammals in the area of potential sound effects during construction; dates and times when observations and in-water construction activities were conducted; dates and times when in-water construction activities were suspended because of marine mammals, etc.
- Ability to communicate orally, by radio, or in-person with project personnel to provide real time information on marine mammals observed in the area, as needed.

The Corps will comply with any additional monitoring measures required by NMFS.

14.0 Suggested Means of Coordination

The Corps has met with staff from the West Coast Marine Mammal Stranding Network to discuss this project action. Based on their feedback, the Corps will continue to coordinate with the Marine Mammal Stranding Network and develop a stranding response plan prior to start of work. The Corps has also checked NMFS' interactive map and reviewed available information for other activities in the lower Columbia River.

The data recorded during marine mammal monitoring activities will be provided to NMFS in the monitoring reports. These reports will provide useful information regarding the presence of the marine mammals discussed in this document in the project area and their behavioral response to construction activities. The monitoring data collected will inform the Corps and NMFS staff and assist the evaluation of the potential effects of future projects of similar scope on the lower Columbia River. The Corps will also share the results of monitoring with ODFW and WDFW and upload the monitoring report into the Corps' public digital library.

The Corps will check NMFS' interactive IHA map prior to the start of work and reach out to any others performing similar activities in the lower Columbia River to exchange monitoring data in real time if practicable to inform both activities. The Corps will also reach out to NMFS Northwest Fisheries Science Center Marine Mammal Ecology Team prior to initiating pile driving to notify them of the activity and gather any new information available on the location of marine mammals in the project area.

15.0 References

Adams, J., J.F. Jonathan, J.W. Mason, and J.Y. Takekawa. 2014. Pacific Continental Shelf Environmental Assessment (PaCSEA). https://www.boem.gov/2014-003/.

Barham, R. 2017. App D13.09 – Underwater noise baseline and modeling. Subacoustech Environmental Report No. E522R0704. Subacoustech Environmental Ltd., Hampshire, England, 46 pp.

Barlow, J., M.C. Ferguson, E.A. Becker, J.V. Redfern, K.A. Forney, I.L. Vilchis, P.C. Fiedler, T. Gerrodette, and L.T. Ballance. 2009. Predictive Modeling of Cetacean Densities in the Eastern Pacific Ocean. NOAA Technical Memorandum. NOAA-TM-NMFS-SWFSC-444. 229pp.

California Department of Transportation (Caltrans). 2015. Technical Guidance for the Assessment and Mitigation of the Hydroacoustic Effects of Pile Driving on Fish. Caltrans Division of Environmental Analysis, Sacramento, California. 532 pp. http://www.dot.ca.gov/hq/env/bio/files/bio_tech_guidance_hydroacoustic_effects_110215.pdf.

Columbian, The (2016). Humpbacks put on a show in the Columbia River. Newspaper article published August 19th, 2016. http://www.chinookobserver.com/co/local-news/20160819/humpbacks-put-on-a-show-in-the-columbia-river.

Daily Astorian (2018). Killer whales spotted near Astoria Bridge. May 9, 2018. https://www.dailyastorian.com/news/local/killer-whales-spotted-near-astoria-bridge/article_01462082-731a-5675-986f-68ffd32fe86d.html.

Greenbusch Group. 2018. Pier 62 Project Draft Acoustic Monitoring Season 1 (2017/2018) Report 3 (NWS-2016-WRD, WCR-2016-5583, 01EWF00-2016-F-1325). Prepared for City of Seattle Department of Transportation. April 9, 2018.

Grette Associates, LLC. 2016. Kiewit Infrastructure West Co. Mouth of the Columbia River Jetty A Rehabilitation: Marine Mammal Monitoring Summary Report. Prepared for Kiewit Infrastructure West Co. Contract No. W9127N-15-C-0025. August 1, 2016.

Griffith, David. 2015. Fish Biologist, U.S. Army Corps of Engineers, Portland District. Personal Communication. March 24, 2015.

Halpin, P.N., A.J. Read, E. Fujioka, B.D. Best, B. Donnelly, L.J. Hazen, C. Kot, K. Urian, E. LaBrecque, A. Dimatteo, J. Cleary, C. Good, L.B. Crowder, and K.D. Hyrenbach. 2009. OBIS-SEAMAP: The world data center for marine mammal, sea bird, and sea turtle distributions. Oceanography 22(2):104-115). OBIS-SEAMAP accessed 1/11/2019 at http://seamap.env.duke.edu/species/180473.

Haxel, J.H., R.P. Dziak, and Matsumoto, H. 2011. Obtaining baseline measurements of ocean ambient sound at a mobile test berth site for wave energy conversion off the central Oregon Coast. In Proceedings of Oceans' 11 MTS/IEEE, Kona, IEEE, Piscataway, NJ, 19–22 September 2011, No. 6107223.

Herzing, D.L. and B.R. Mate. 1984. Gray Whale Migrations along the Oregon Coast 1978-1981. Academic Press, Inc.

Hildebrand J.A. 2005. Impacts of anthropogenic sound. In: Reynolds J.E., Perrin W.F., Reeves R.R., Montgomery S., Ragen T.J. (eds) Marine mammal research: conservation beyond crisis. The Johns Hopkins University Press, Baltimore, MD. 101–124.

Houghton, J., Baird, R.W., Emmons, C.K., and Hanson, M.B. 2015a. Changes in the occurrence and behavior of mammal-eating killer whales in southern British Columbia and Washington State, 1987-2010. Northwest Science 89(2): 154-169.

Houghton, J., Holt, M.M., Giles, D.A., Hanson, M.B., Emmons, C.K., Hogan, J.T., Branch, T.A., and Van Blaricom, G.R. 2015b. The relationship between vessel traffic and noise levels received by killer whales (*Orcinus orca*). PlosONE 10(12): e0140119. doi:10.1371/journal.pone.0140119.

Illingworth & Rodkin, Inc. 2017. Pile-Driving Noise Measurements at Atlantic Fleet Installations: 28 may 2013 – 28 April 2016. Final Report. Submitted to: Naval Facilities Engineering Command Atlantic, HDR Environmental, Operations and Construction Inc. Contract No. N62470-10-D-3011, Task Order CT033. 152 pp.

Jeffries, S.J, P.J. Gearin, H.R. Huber, D.L. Saul, and D.A. Pruett. 2000. Atlas of Seal and Sea Lion Haulout Sites in Washington. Washington Department of Fish and Wildlife, Wildlife Science Division. pp. 150.

Laughlin, J. 2010. Memorandum: Vashon Ferry Terminal Test Pile Project – Vibratory Pile Monitoring Technical Memorandum. Washington State Department of Transportation.

Mate, B.R. 1973. Population kinetics and related ecology of the northern sea lion, *Eumetopias jubatus*, and the California sea lion, *Zalophus californianus*, along the Oregon coast. Ph.D. Thesis. University of Oregon, Eugene. 102 pp.

NMFS. 2011. Endangered Species Act Biological Opinion and Conference Report and Magnuson-Stevens Fishery Conservation and Management Act Essential Fish Habitat Consultation for the Major Rehabilitation of the Jetty System at the Mouth of the Columbia River. NMFS No 2010/06104. Northwest Region, Seattle, WA.

NMFS. 2018. Manual for Optional User Spreadsheet Tool (Version 2.0) for: 2018 Technical Guidance for Assessing the Effects of Anthropogenic Sound on Marine Mammal Hearing (Version 2.0): Underwater Thresholds for Onset of Permanent and Temporary Threshold

Shifts. Silver Spring, Maryland: Office of Protected Resources, National Marine Fisheries Service.

NOAA, 2013a. Harbor Porpoise (*Phocoena phocoena*): Northern California/Southern Oregon Stock website, accessed January 3, 2019 at: https://www.fisheries.noaa.gov/national/marine-mammal-protection/marine-mammal-stock-assessment-reports-species-stock.

NOAA. 2013b. Alaska Marine Mammal Stock Assessments, Killer Whale (Orcinus orca): West Coast Transient Stock Assessment. NOAA-TM-AFSC-277 Allen, B. M., and R. P. Angliss. Revised 6/10/2013.

NOAA, 2013c. Harbor Seal (*Phoca vitulina richardii*): Oregon/Washington Coast Stock website, accessed December 31, 2018 at: https://www.fisheries.noaa.gov/national/marine-mammal-protection/marine-mammal-stock-assessment-reports-species-stock.

NOAA, 2014a. California Sea Lion (*Zalophus californianus*): U.S. Stock website, accessed December 31, 2018 at: https://www.fisheries.noaa.gov/national/marine-mammal-protection/marine-mammal-stock-assessment-reports-species-stock.

NOAA, 2014b. Gray Whale (*Eschrichtius robustus*): Eastern North Pacific Stock website, accessed January 7, 2019 at: https://www.fisheries.noaa.gov/national/marine-mammal-protection/marine-mammal-stock-assessment-reports-species-stock.

NOAA, 2014c. Northern Elephant Seal (*Mirounga angustirostris*): California Breeding Stock website, accessed January 4, 2019 at: https://www.fisheries.noaa.gov/national/marine-mammal-protection/marine-mammal-stock-assessment-reports-species-stock.

NOAA, 2016. Fin Whale (*Balaenoptera physalus physalus*): California/Oregon/Washington Stock website, accessed January 4, 2019 at: https://www.fisheries.noaa.gov/national/marine-mammal-protection/marine-mammal-stock-assessment-reports-species-stock.

NOAA, 2017a. Blue Whale (*Balaenoptera musculus musculus*): Eastern North Pacific Stock website, accessed January 7, 2019 at: https://www.fisheries.noaa.gov/national/marine-mammal-protection/marine-mammal-stock-assessment-reports-species-stock.

NOAA, 2017b. Humpback Whale (*Megaptera novaeangliae*): California/Oregon/Washington Stock website, accessed December 26, 2018 at: https://www.fisheries.noaa.gov/national/marine-mammal-protection/marine-mammal-stock-assessment-reports-species-stock.

NOAA, 2017c. Stellar Sea Lion (*Eumetopias jubatus*): Eastern U.S. Stock website, accessed December 26, 2018 at: https://www.fisheries.noaa.gov/national/marine-mammal-protection/marine-mammal-stock-assessment-reports-species-stock.

NOAA, 2017d Technical Memorandum NMFS. U.S. Pacific Marine Mammal Stock Assessments: 2017. J.V. Carretta, and others. NOAA-TM-NMFS-SWFSC-602. https://repository.library.noaa.gov/view/noaa/18080.

OBIS-SEAMAP (Ocean Biogeographic Information System, Spatial Ecological Analysis of Megavertebrate Populations). 2019. Located at http://seamap.env.duke.edu/species/180473, accessed 5/21/2019.

ODFW. 2014. Bryan Wright, Biometrician. Marine Mammal Research Program. Corvallis, OR 97330 (Excel data and narrative via email 9/26/2014).

ODFW, 2018. California sea lion (Zalophus californianus). Marine mammal species website, accessed December 31, 2018 at: https://www.dfw.state.or.us/MRP/mammals/species.asp.

United States Navy. 2015. Proxy source sound levels and potential bubble curtain attenuation for acoustic modeling of nearshore marine pile driving at Navy installations in Puget Sound. Prepared by Michael Slater, Naval Surface Warfare Center, Carderock Division, and Sharon Rainsberry, Naval Facilities Engineering Command Northwest. Revised January 2015. Table 2-2.

United States Army Corps of Engineers (USACE). 2016. Request for Incidental Harassment Authorization and a Letter of Authorization under the Marine Mammal Protection Act for Rehabilitation of the Jetty System at the Mouth of the Columbia River: North Jetty, South Jetty, and Jetty A. January 2016 Addendum.

Washington State Department of Transportation (WSDOT). 2018. BA Manual, Chapter 7.0: Construction Noise Impact Assessment. Website accessed January 8, 2019 at: https://www.wsdot.wa.gov/sites/default/files/2018/01/18/Env-FW-BA_ManualCH07.pdf.

WSDOT. 2019. Pile driving information: Airborne Pile Driving Noise. Website accessed January 8, 2019 at: https://www.wsdot.wa.gov/sites/default/files/2017/12/12/ENV-FW-AirPileDrivingNoise.pdf.

Appendix A: Noise Level Worksheets

Pile Driving Disturbance Calculations

Practical Spreading Loss Model for sound attenuation:			
AIR	D1=D0 * 10^((initial SPL - disturbance threshold)/alpha) with alpha=20 for hard-site conditions		
WATER	D1=D0 * 10^((initial SPL - disturbance threshold)/alpha) with alpha=15 for water		
Calculations for attenuation to MARINE MAMMAL LEVEL B DISTURBANCE			
- should use Leq/RMS dB (unweighted) estimates for these calculations			
	estimated meters		
AIR - impact hammer - phocid	152.4		WSDOT 2014 110 Peak dB
AIR - impact hammer - otariid	48.1931115		
	meters		
AIR - vibratory hammer - phocid	32.209573		
AIR - vibratory hammer - otariid	10.1855613		
Calculations for MARINE MAMMAL LEVEL B DISTURBANCE in WATER			
24-in steel pipe piles w/Impact Hammer	1000	0.62137	
24-in steel pipe piles w/Vibratory Hammer	5412	3.36267	
24-in timber piles REMOVAL w/Vibratory Hammer	1359	0.84466	
NOTE:			
D1 (in meters) = distance from the pile at which noise attenuates to the threshold value			
D0 (in meters) = di since we are using Lmax at 50 feet, D0 should be ~15.24 meters			

Impact Pile Driving PTS Calculations

STEP 2: WEIGHTING FACTOR ADJUSTMENT		
Weighting Factor Adjustment (kHz)¥	2	Default

E.1-2: ALTERNATIVE METHOD TO CALCULATE PK AND SEL_{cum} (SINGLE STRIKE EQUIVALENT)	
Unweighted $SEL_{cum\ (at\ measured\ distance)}$ = SEL_{ss} + 10 Log (# strikes)	212.2

SEL_{cum}	
Source Level (Single Strike SEL)	177
Number of strikes per pile	550
Number of piles per day	6
Propagation (xLogR)	15
Distance of single strike SEL measurement (meters)*	10

*Unless otherwise specified, source levels are referenced 1 m from the source.

PK	
Source Level (PK SPL)	203
Distance of source level measurement (meters)*	10
Source level at 1 meter	218.0

*Unless otherwise specified, source levels are referenced 1 m from the source.

RESULTANT ISOPLETHS*

*Impulsive sounds have dual metric thresholds (SELcum & PK). Metric producing largest isopleth should be used.

Hearing Group	Low-Frequency Cetaceans	Mid-Frequency Cetaceans	High-Frequency Cetaceans	Phocid Pinnipeds	Otariid Pinnipeds
SEL_{cum} Threshold	183	185	155	185	203
PTS Isopleth to threshold (meters)	881.2	31.3	1,049.7	471.6	34.3
PK Threshold	219	230	202	218	232
PTS PK Isopleth to threshold (meters)	NA	NA	11.7	NA	NA

Vibratory Pile (timber) Removal PTS Calculations

STEP 2: WEIGHTING FACTOR ADJUSTMENT

Weighting Factor Adjustment (kHz)[¥]	2.5	Default

STEP 3: SOURCE-SPECIFIC INFORMATION

Source Level (RMS SPL)	152
Number of piles within 24-h period	9
Duration to drive a single pile (minutes)	5
Duration of Sound Production within 24-h period (seconds)	2700
10 Log (duration of sound production)	34.31
Propagation (xLogR)	15
Distance from source level measurement (meters)[+]	10

[+]Unless otherwise specified, source levels are referenced 1 m from the source.

RESULTANT ISOPLETHS

Hearing Group	Low-Frequency Cetaceans	Mid-Frequency Cetaceans	High-Frequency Cetaceans	Phocid Pinnipeds	Otariid Pinnipeds
SEL_{cum} Threshold	199	198	173	201	219
PTS Isopleth to threshold (meters)	1.4	0.1	2.1	0.9	0.1

Vibratory Pile (steel pipe) Removal PTS Calculations

STEP 2: WEIGHTING FACTOR ADJUSTMENT

Weighting Factor Adjustment (kHz)[¥]	2.5	Default

STEP 3: SOURCE-SPECIFIC INFORMATION

Source Level (RMS SPL)	161
Number of piles within 24-h period	9
Duration to drive a single pile (minutes)	5
Duration of Sound Production within 24-h period (seconds)	2700
10 Log (duration of sound production)	34.31
Propagation (xLogR)	15
Distance from source level measurement (meters)[+]	10

[+]Unless otherwise specified, source levels are referenced 1 m from the source.

RESULTANT ISOPLETHS

Hearing Group	Low-Frequency Cetaceans	Mid-Frequency Cetaceans	High-Frequency Cetaceans	Phocid Pinnipeds	Otariid Pinnipeds
SEL_{cum} Threshold	199	198	173	201	219
PTS Isopleth to threshold (meters)	5.6	0.5	8.3	3.4	0.2

Vibratory Pile (steel pipe) Driving PTS Calculations

STEP 2: WEIGHTING FACTOR ADJUSTMENT

Weighting Factor Adjustment (kHz)*	2.5	Default

STEP 3: SOURCE-SPECIFIC INFORMATION

Source Level (RMS SPL)	161
Number of piles within 24-h period	6
Duration to drive a single pile (minutes)	30
Duration of Sound Production within 24-h period (seconds)	10800
10 Log (duration of sound production)	40.33
Propagation (xLogR)	15
Distance from source level measurement (meters)+	10

*Unless otherwise specified, source levels are referenced 1 m from the source.

RESULTANT ISOPLETHS

Hearing Group	Low-Frequency Cetaceans	Mid-Frequency Cetaceans	High-Frequency Cetaceans	Phocid Pinnipeds	Otariid Pinnipeds
SEL_{cum} Threshold	199	198	173	201	219
PTS Isopleth to threshold (meters)	**14.2**	**1.3**	**21.0**	**8.6**	**0.6**

Appendix B: Isopleth Figures for 24-inch Unattenuated Impact Pile Driving for Pile Dikes 4.01 and 6.37, for 24-inch Unattenuated Vibratory Pile Driving for Pile Dikes 4.01 and 6.37, and for 24-inch Unattenuated Vibratory Pile Removal for Pile Dikes 4.01 and 6.37.